IGBT for Automotive Application

1200 V, 25 A

AFGHL25T120RLD

ON Semiconductor®

www.onsemi.com

V_{CES}	I_C	$V_{CE(Sat)}$
1200 V	25 A	1.73 V (Typ.)

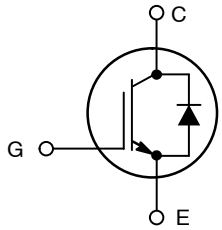

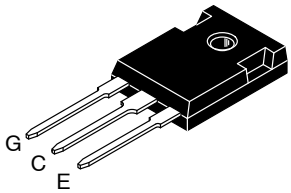

TO−247−3L
CASE 340CX

Description

This Insulated Gate Bipolar Transistor (IGBT) features a robust and cost effective Field Stop II Trench construction. Provides superior performance in demanding switching applications, offering both low on state voltage and minimal switching loss, which is AEC Q101 qualified offer the optimum performance for both hard and soft switching topology in automotive application.

Features

- Extremely Efficient Trench with Field Stop Technology
- Maximum Junction Temperature: T_J = 175°C
- Short Circuit Withstand Time 9 μs
- 100% of the Parts Tested for I_{LM} (Note 2)
- Fast Switching
- Tighten Parameter Distribution
- AEC−Q101 Qualified and PPAP Capable
- This Device is Pb−Free, Halogen Free/BFR Free and is RoHS Compliant

Typical Applications

- Automotive HEV−EV E−Compressor
- Automotive HEV−EV PTC Heater
- Automotive HEV−EV PTC Onboard Chargers
- Automotive HEV−EV DC−DC Converters

MARKING DIAGRAM

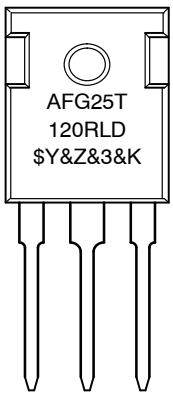

AFG25T120RLD	= Specific Device Code
$Y	= ON Semiconductor Logo
&Z	= Assembly Plant Code
&3	= 3−Digit Data Code
&K	= 2−Digit Lot Traceability Code

ORDERING INFORMATION

Device	Package	Shipping
AFGHL25T120RLD	TO−247−3L	30 Units / Rail

© Semiconductor Components Industries, LLC, 2021

ABSOLUTE MAXIMUM RATINGS

Description	Symbol	Value	Units
Collector to Emitter Voltage	V_{CES}	1200	V
Gate to Emitter Voltage	V_{GES}	±20	V
Transient Gate to Emitter Voltage		±30	
Collector Current @ T_C = 25°C (Note 1)	I_C	48	A
Collector Current @ T_C = 100°C		25	
Pulsed Collector Current (Note 2)	I_{LM}	100	A
Pulsed Collector Current (Note 3)	I_{CM}	100	A
Diode Forward Current @ T_C = 25°C (Note 1)	I_F	48	A
Diode Forward Current @ T_C = 100°C		25	
Pulsed Diode Maximum Forward Current	I_{FM}	100	A
Maximum Power Dissipation @ T_C = 25°C	P_D	400	W
Maximum Power Dissipation @ T_C = 100°C		200	
Short Circuit Withstand Time V_{GE} = 15 V, V_{CE} = 600 V, T_C = 150°C	SCWT	9	μs
Operating Junction Temperature / Storage Temperature Range	T_J, T_{STG}	−55 to +175	°C
Maximum Lead Temp. For Soldering Purposes, ⅛" from case for 5 seconds	T_L	260	°C

Stresses exceeding those listed in the Maximum Ratings table may damage the device. If any of these limits are exceeded, device functionality should not be assumed, damage may occur and reliability may be affected.

1. Value limited by bond wire.
2. V_{CC} = 600 V, V_{GE} = 15 V, I_C = 100 A, R_G = 15 Ω, Inductive Load, 100% Tested
3. Repetitive rating: pulse width limited by max. Junction temperature.

THERMAL CHARACTERISTICS

Rating	Symbol	Max.	Units
Thermal Resistance, Junction to Case, for IGBT	$R_{\theta JC}$	0.37	°C/W
Thermal Resistance, Junction to Case, Max for Diode	$R_{\theta JC}$	0.63	°C/W
Thermal Resistance, Junction to Ambient, Max	$R_{\theta JA}$	40	°C/W

ELECTRICAL CHARACTERISTICS (T_J = 25°C unless otherwise specified)

Parameter	Test Conditions	Symbol	Min.	Typ.	Max.	Unit
OFF CHARACTERISTICS						
Collector−emitter Breakdown Voltage, Gate−emitter Short−circuited	V_{GE} = 0 V, I_C = 1mA	BV_{CES}	1250	–	–	V
Temperature Coefficient of Breakdown Voltage	V_{GE} = 0 V, I_C = 1mA	$\Delta BV_{CES}/\Delta T_J$	–	1.3	–	V/°C
Collector−emitter Cut−off Current, Gate−emitter Short−circuited	V_{GE} = 0 V, V_{CE} = V_{CES}	I_{CES}	–	–	40	μA
Gate Leakage Current, Collector−emitter Short−circuited	V_{GE} = V_{GES}, V_{CE} = 0 V	I_{GES}	–	–	±400	nA
ON CHARACTERISTICS						
Gate−emitter Threshold Voltage	V_{GE} = V_{CE}, I_C = 25 mA	$V_{GE(th)}$	5.1	6.1	7.1	V
Collector−emitter Saturation Voltage	V_{GE} = 15 V, I_C = 25 A V_{GE} = 15 V, I_C = 25 A, T_C = 175°C	$V_{CE(sat)}$	– –	1.73 2.09	2.0 –	V

ELECTRICAL CHARACTERISTICS (T_J = 25°C unless otherwise specified) (continued)

Parameter	Test Conditions	Symbol	Min.	Typ.	Max.	Unit
DYNAMIC CHARACTERISTICS						
Input Capacitance	V_{CE} = 30 V, V_{GE} = 0 V, f = 1 MHz	C_{ies}	–	6174	–	pF
Output Capacitance		C_{oes}	–	212	–	
Reverse Transfer Capacitance		C_{res}	–	114	–	
SWITCHING CHARACTERISTICS, INDUCTIVE LOAD						
Turn−on Delay Time	T_C = 25°C V_{CC} = 600 V, I_C = 12.5 A Rg = 5 Ω V_{GE} = 15 V Inductive Load	$t_{d(on)}$	–	25.6	–	ns
Rise Time		t_r	–	9.6	–	
Turn−off Delay Time		$t_{d(off)}$	–	126.0	–	
Fall Time		t_f	–	86.0	–	
Turn−on Switching Loss		E_{on}	–	0.90	–	mJ
Turn−off Switching Loss		E_{off}	–	0.31	–	
Total Switching Loss		E_{ts}	–	1.22	–	
Turn−on Delay Time	T_C = 25°C V_{CC} = 600 V, I_C = 25 A Rg = 5 Ω V_{GE} = 15 V Inductive Load	$t_{d(on)}$	–	27.2	–	ns
Rise Time		t_r	–	16.0	–	
Turn−off Delay Time		$t_{d(off)}$	–	116.0	–	
Fall Time		t_f	–	89.0	–	
Turn−on Switching Loss		E_{on}	–	1.94	–	mJ
Turn−off Switching Loss		E_{off}	–	0.73	–	
Total Switching Loss		E_{ts}	–	2.67	–	
Turn−on Delay Time	T_C = 175°C V_{CC} = 600 V, I_C = 12.5 A Rg = 5 Ω V_{GE} = 15 V Inductive Load	$t_{d(on)}$	–	24.0	–	ns
Rise Time		t_r	–	12.0	–	
Turn−off Delay Time		$t_{d(off)}$	–	144.0	–	
Fall Time		t_f	–	242.0	–	
Turn−on Switching Loss		E_{on}	–	1.42	–	mJ
Turn−off Switching Loss		E_{off}	–	0.84	–	
Total Switching Loss		E_{ts}	–	2.26	–	
Turn−on Delay Time	T_C = 175°C V_{CC} = 600 V, I_C = 25 A Rg = 5 Ω V_{GE} = 15 V Inductive Load	$t_{d(on)}$	–	28.0	–	ns
Rise Time		t_r	–	16.0	–	
Turn−off Delay Time		$t_{d(off)}$	–	131.0	–	
Fall Time		t_f	–	213.0	–	
Turn−on Switching Loss		E_{on}	–	2.87	–	mJ
Turn−off Switching Loss		E_{off}	–	1.7	–	
Total Switching Loss		E_{ts}	–	4.54	–	
Total Gate Charge	V_{CE} = 600 V, I_C = 25 A, V_{GE} = 15 V	Q_g	–	277	–	nC
Gate to Emitter Charge		Q_{ge}	–	53	–	
Gate to collector Charge		Q_{gc}	–	146	–	
DIODE CHARACTERISTICS						
Forward Voltage	I_F = 25 A, T_C = 25°C I_F = 25 A, T_C = 175°C	V_F	– –	1.43 1.44	2.0 –	V
Reverse Recovery Energy	T_C = 25°C V_R = 600 V, I_F = 12.5 A, dI_F/dt = 1000 A/μs	E_{rec}	–	0.46	–	mJ
Reverse Recovery Time		T_{rr}	–	112	–	ns
Reverse Recovery Charge		Q_{rr}	–	1538	–	nC

ELECTRICAL CHARACTERISTICS (T_J = 25°C unless otherwise specified) (continued)

Parameter	Test Conditions	Symbol	Min.	Typ.	Max.	Unit
DIODE CHARACTERISTICS						
Reverse Recovery Energy	T_C = 25°C V_R = 600 V, I_F = 25 A, dI_F/dt = 1000 A/μs	E_{rec}	–	0.75	–	mJ
Reverse Recovery Time		T_{rr}	–	159	–	ns
Reverse Recovery Charge		Q_{rr}	–	2429	–	nC
Reverse Recovery Energy	T_C = 175°C V_R = 600 V, I_F = 12.5 A, dI_F/dt = 1000 A/μs	E_{rec}	–	1.13	–	mJ
Reverse Recovery Time		T_{rr}	–	185	–	ns
Reverse Recovery Charge		Q_{rr}	–	3241	–	nC
Reverse Recovery Energy	T_C = 175°C V_R = 600 V, I_F = 25 A, dI_F/dt = 1000 A/μs	E_{rec}	–	1.48	–	mJ
Reverse Recovery Time		T_{rr}	–	214	–	ns
Reverse Recovery Charge		Q_{rr}	–	4233	–	nC

Product parametric performance is indicated in the Electrical Characteristics for the listed test conditions, unless otherwise noted. Product performance may not be indicated by the Electrical Characteristics if operated under different conditions.

TYPICAL CHARACTERISTICS

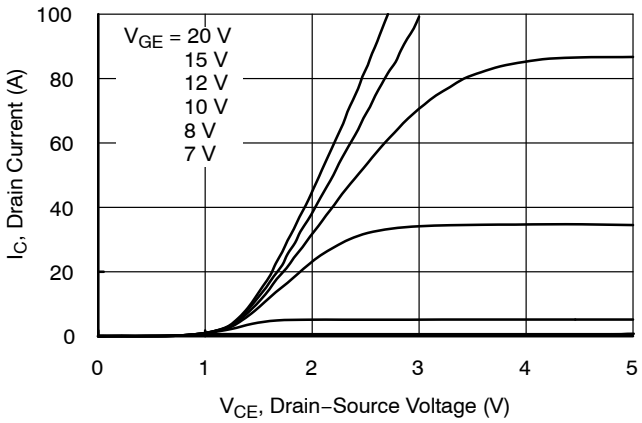

Figure 1. Typical Output Characteristics (25°C)

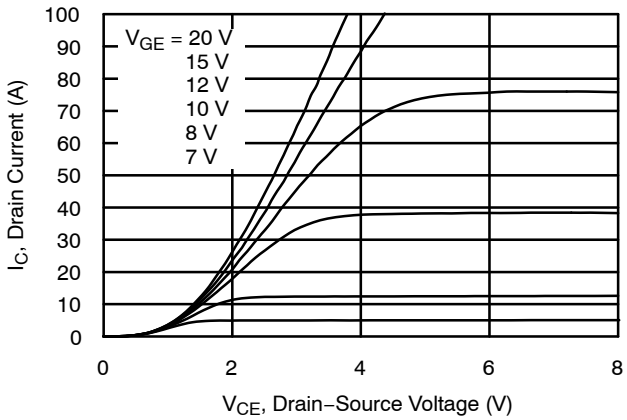

Figure 2. Typical Output Characteristics (175°C)

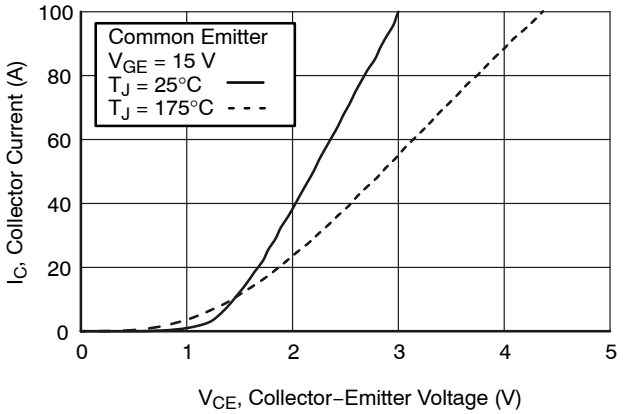

Figure 3. Typical Saturation Voltage Characteristics

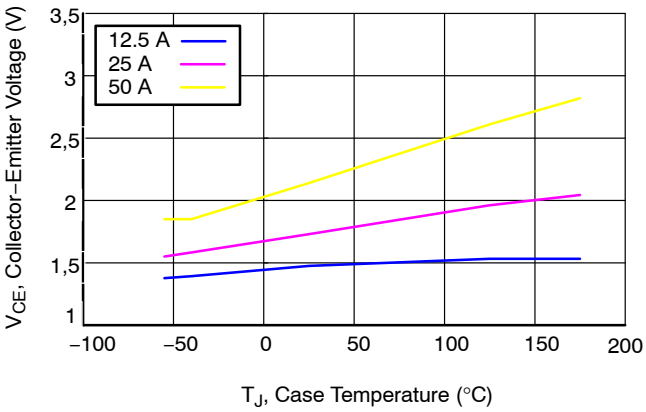

Figure 4. Saturation Voltage vs. Case Temperature at Variant Current Level

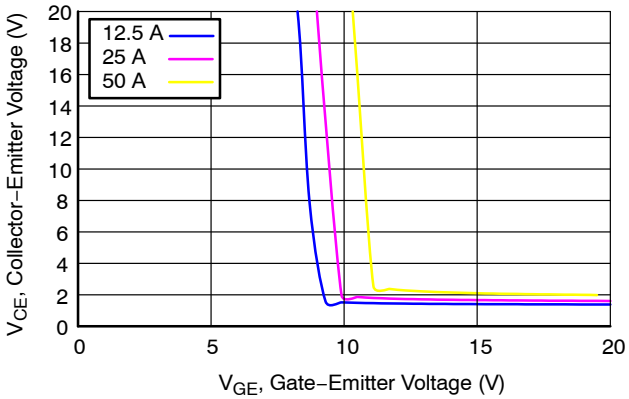

Figure 5. Saturation Voltage vs. V_{GE} (25°C)

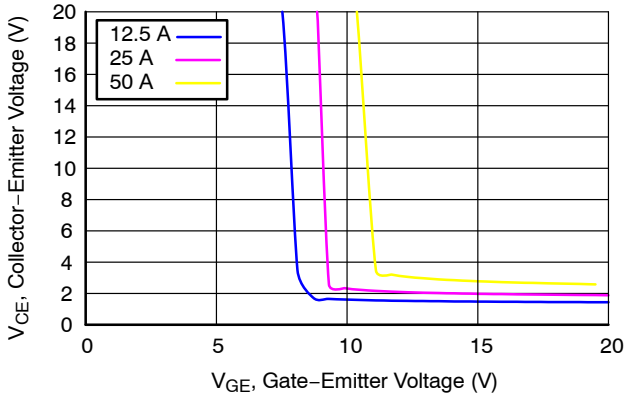

Figure 6. Saturation Voltage vs. V_{GE} (175°C)

TYPICAL CHARACTERISTICS (continued)

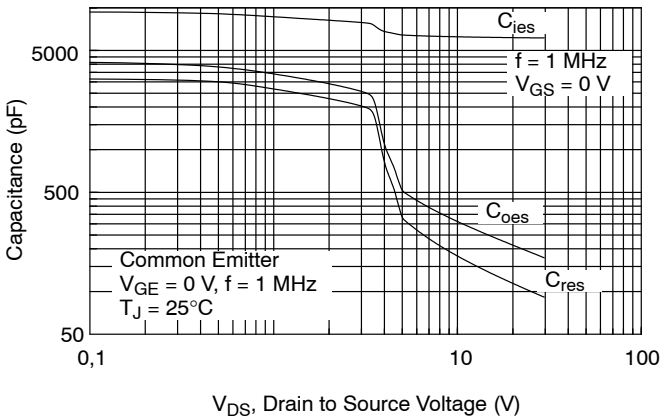

Figure 7. Capacitance Characteristics

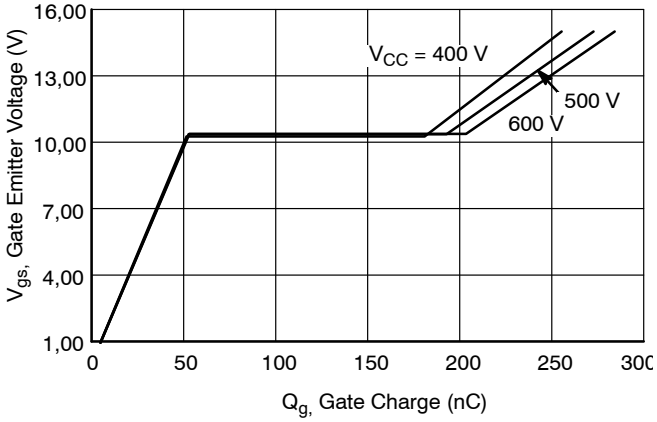

Figure 8. Gate Charge Characteristics

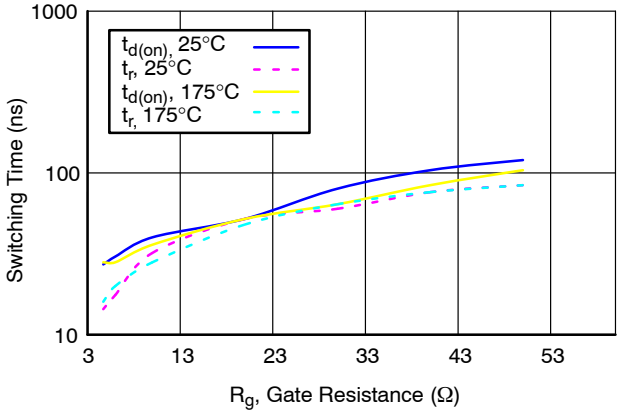

Figure 9. Turn−on Characteristics vs. Gate Resistance

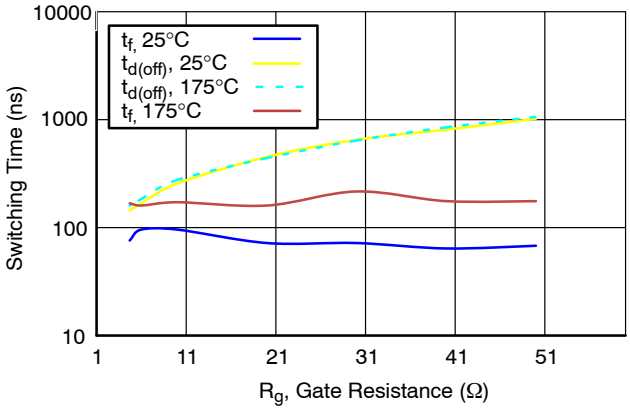

Figure 10. Turn−off Characteristics vs. Gate Resistance

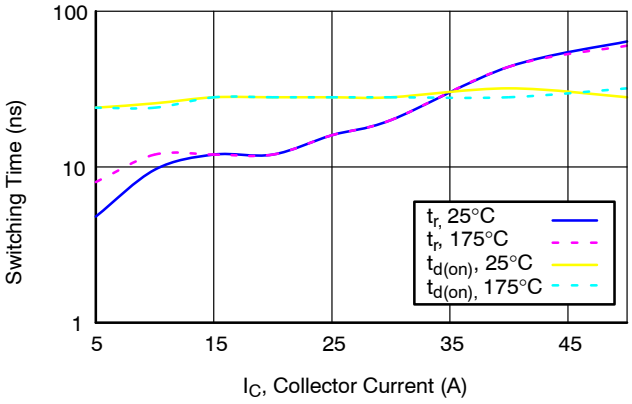

Figure 11. Turn−on Characteristics vs. Collector Current

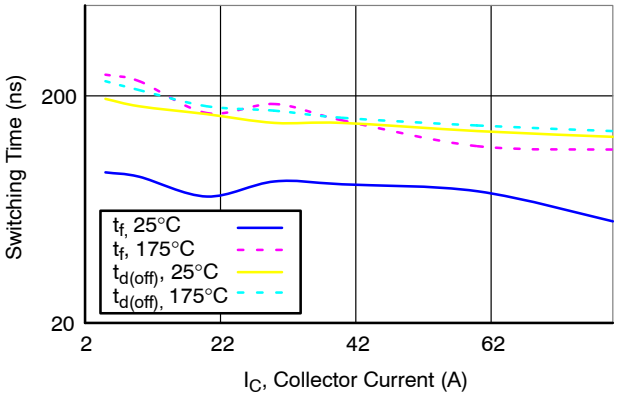

Figure 12. Turn−off Characteristics vs. Collector Current

TYPICAL CHARACTERISTICS (continued)

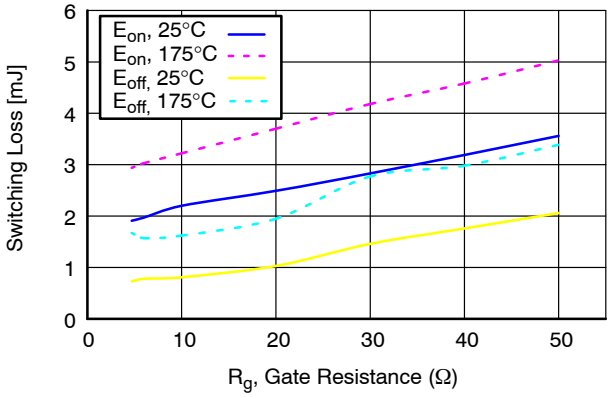

Figure 13. Switching Loss vs. Gate Resistance

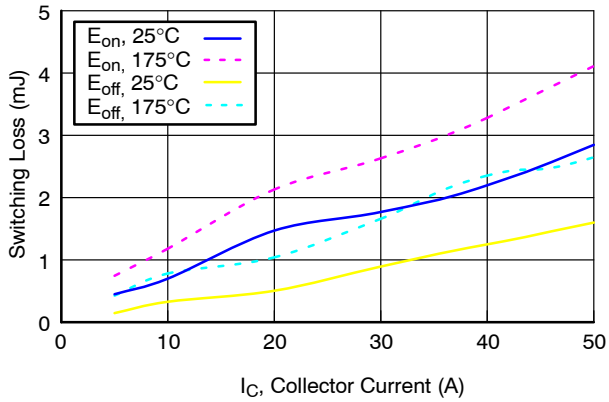

Figure 14. Switching Loss vs. Collector Current

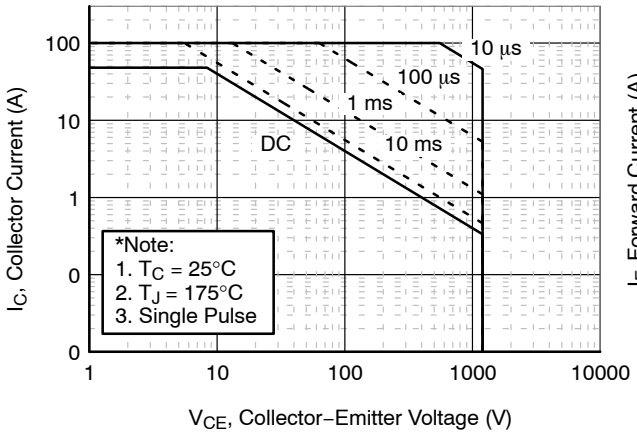

Figure 15. SOA Characteristics

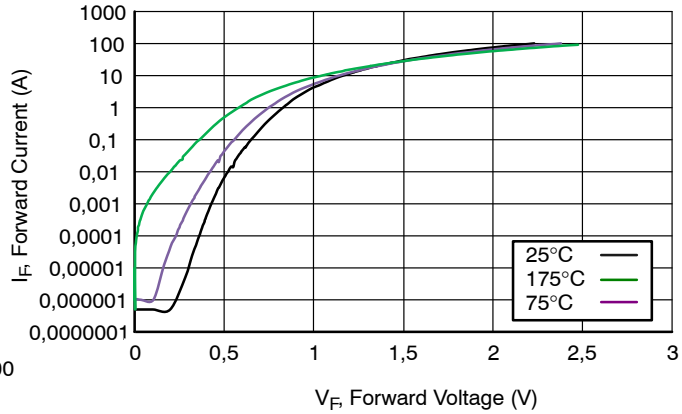

Figure 16. Forward Characteristics

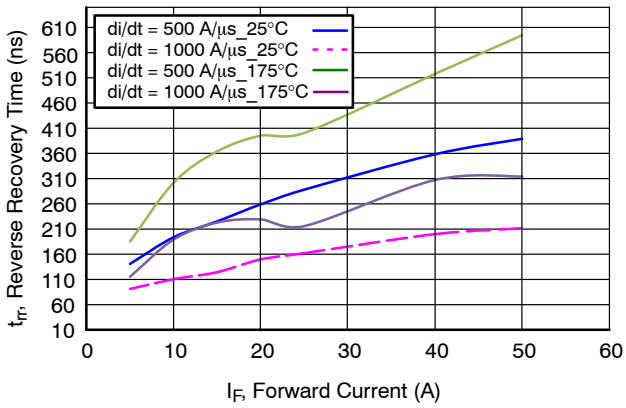

Figure 17. Reverse Recovery Time

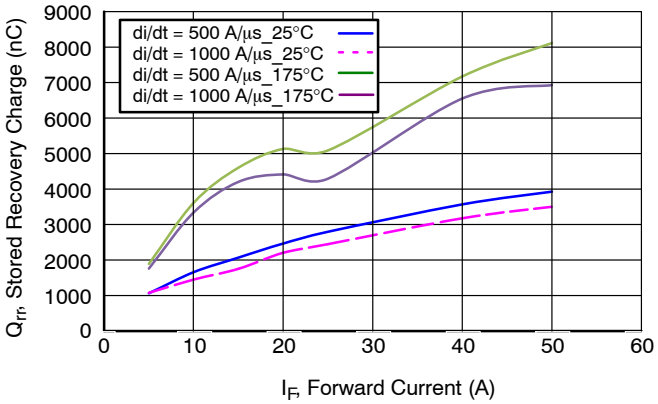

Figure 18. Stored Charge

TYPICAL CHARACTERISTICS (continued)

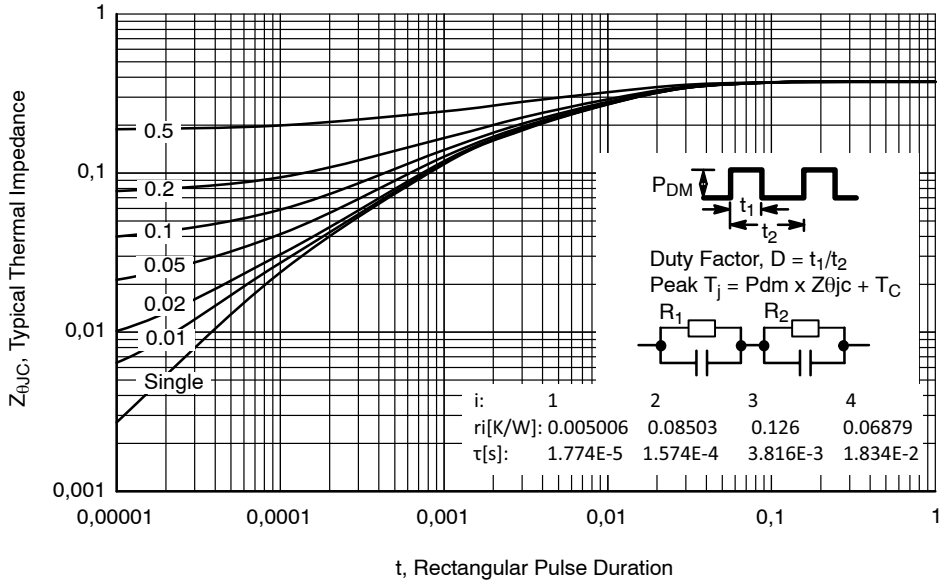

Figure 19. Transient Thermal Impedance of IGBT

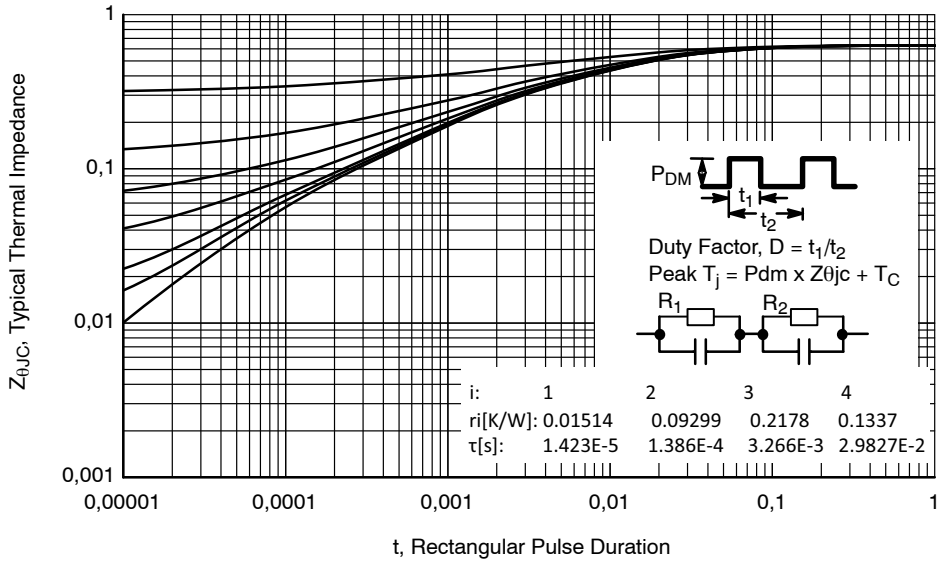

Figure 20. Transient Thermal Impedance of Diode

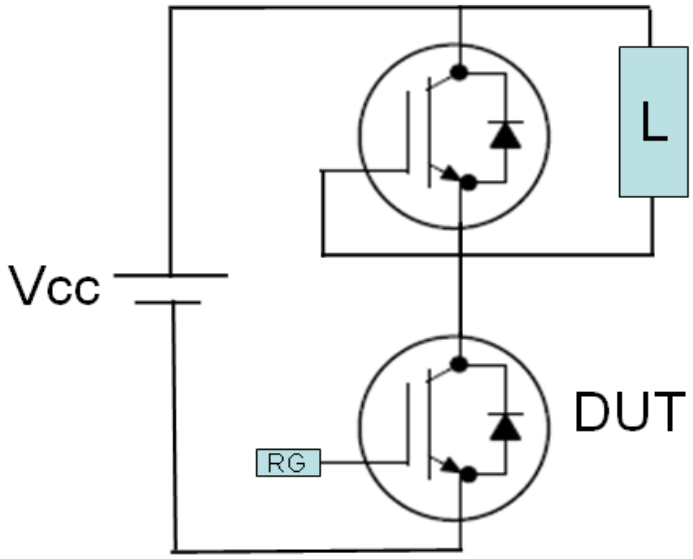

Figure 21. Test Circuit for Switching Characteristics

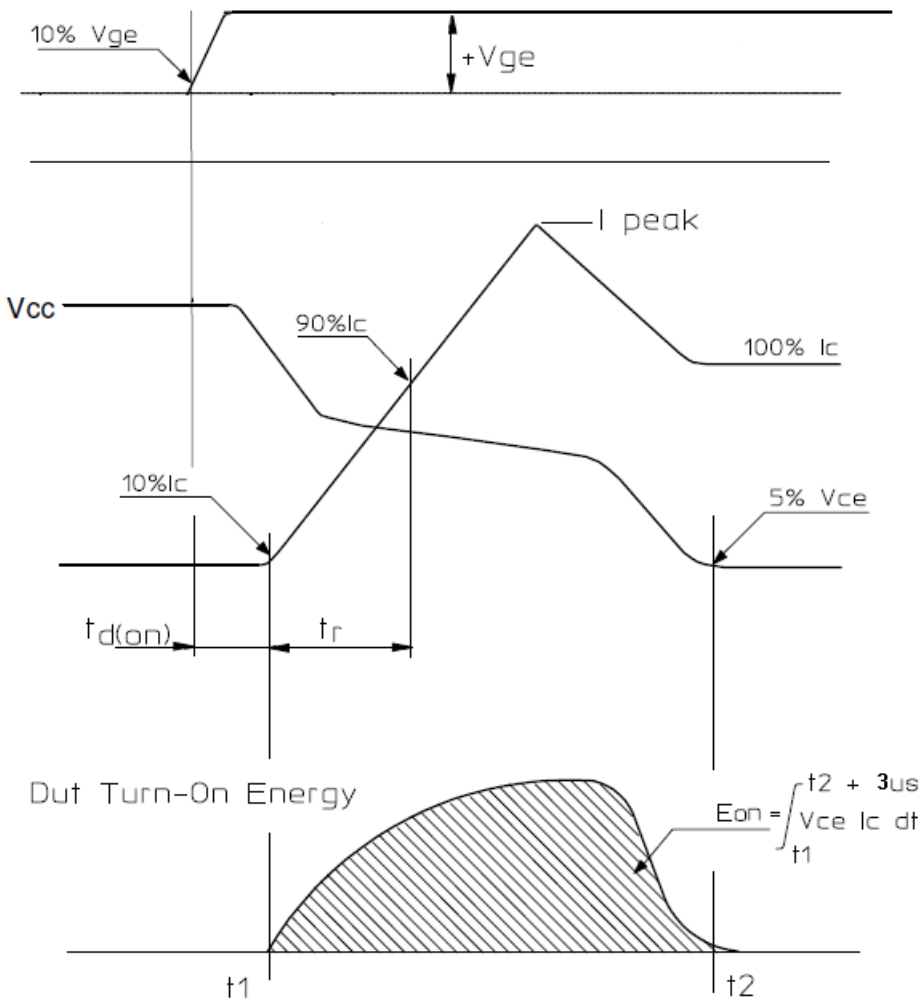

Figure 22. Definition of Turn On Waveform

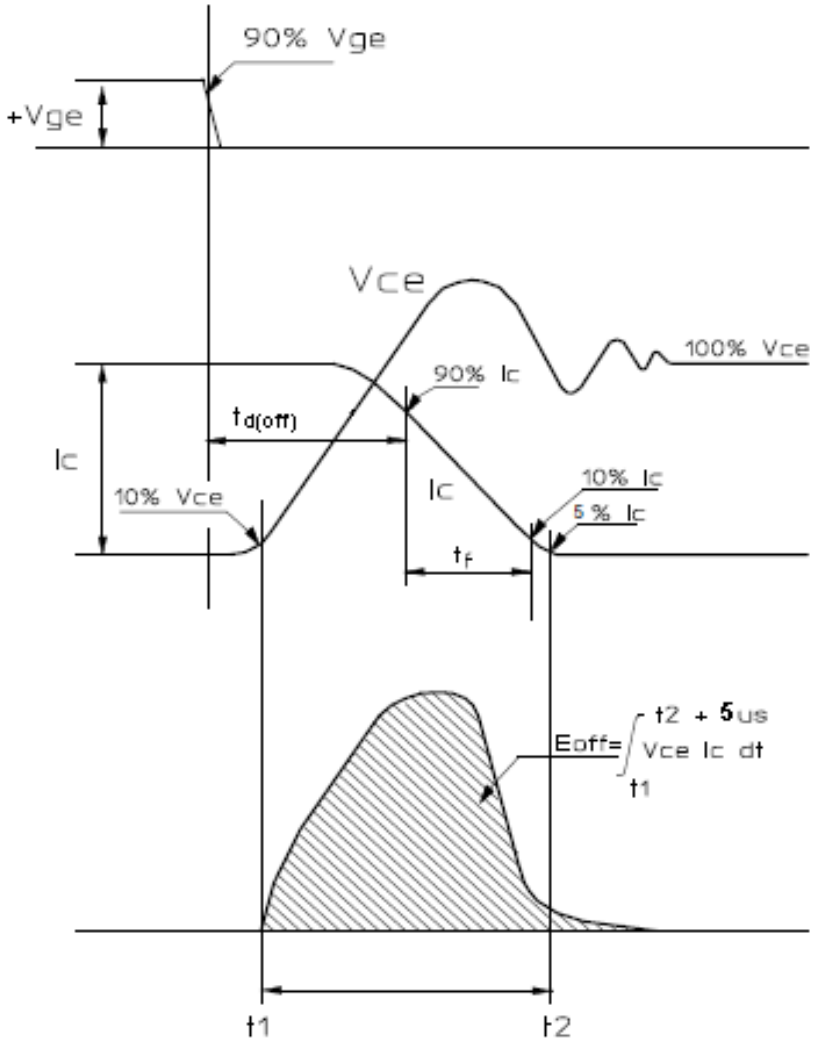

Figure 23. Definition of Turn Off Waveform

TO−247−3LD
CASE 340CX
ISSUE A

DATE 06 JUL 2020

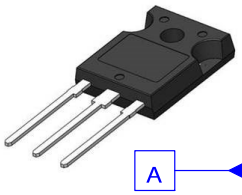

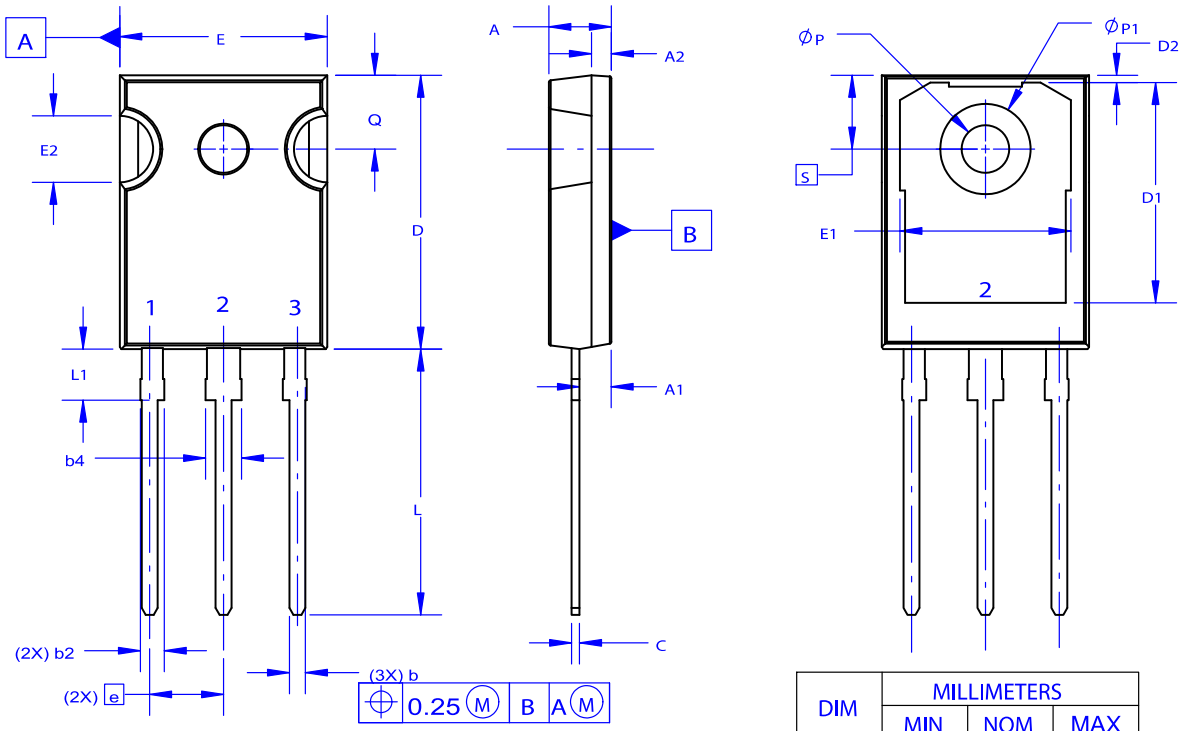

NOTES: UNLESS OTHERWISE SPECIFIED.

A. DIMENSIONS ARE EXCLUSIVE OF BURRS, MOLD FLASH, AND TIE BAR EXTRUSIONS.
B. ALL DIMENSIONS ARE IN MILLIMETERS.
C. DRAWING CONFORMS TO ASME Y14.5 - 2009.
D. DIMENSION A1 TO BE MEASURED IN THE REGION DEFINED BY L1.
E. LEAD FINISH IS UNCONTROLLED IN THE REGION DEFINED BY L1.

DIM	MILLIMETERS		
	MIN	NOM	MAX
A	4.58	4.70	4.82
A1	2.20	2.40	2.60
A2	1.40	1.50	1.60
D	20.32	20.57	20.82
E	15.37	15.62	15.87
E2	4.96	5.08	5.20
e	~	5.56	~
L	19.75	20.00	20.25
L1	3.69	3.81	3.93
ØP	3.51	3.58	3.65
Q	5.34	5.46	5.58
S	5.34	5.46	5.58
b	1.17	1.26	1.35
b2	1.53	1.65	1.77
b4	2.42	2.54	2.66
c	0.51	0.61	0.71
D1	13.08	~	~
D2	0.51	0.93	1.35
E1	12.81	~	~
ØP1	6.60	6.80	7.00

GENERIC MARKING DIAGRAM*

XXXXX = Specific Device Code
A = Assembly Location
Y = Year
WW = Work Week
G = Pb−Free Package

*This information is generic. Please refer to device data sheet for actual part marking. Pb−Free indicator, "G" or microdot " ▪", may or may not be present. Some products may not follow the Generic Marking.

DOCUMENT NUMBER:	98AON93302G	Electronic versions are uncontrolled except when accessed directly from the Document Repository. Printed versions are uncontrolled except when stamped "CONTROLLED COPY" in red.
DESCRIPTION:	TO−247−3LD	PAGE 1 OF 1

onsemi and onsemi are trademarks of Semiconductor Components Industries, LLC dba **onsemi** or its subsidiaries in the United States and/or other countries. **onsemi** reserves the right to make changes without further notice to any products herein. **onsemi** makes no warranty, representation or guarantee regarding the suitability of its products for any particular purpose, nor does **onsemi** assume any liability arising out of the application or use of any product or circuit, and specifically disclaims any and all liability, including without limitation special, consequential or incidental damages. **onsemi** does not convey any license under its patent rights nor the rights of others.

onsemi, onsemi, and other names, marks, and brands are registered and/or common law trademarks of Semiconductor Components Industries, LLC dba "**onsemi**" or its affiliates and/or subsidiaries in the United States and/or other countries. **onsemi** owns the rights to a number of patents, trademarks, copyrights, trade secrets, and other intellectual property. A listing of **onsemi**'s product/patent coverage may be accessed at www.onsemi.com/site/pdf/Patent−Marking.pdf. **onsemi** reserves the right to make changes at any time to any products or information herein, without notice. The information herein is provided "as−is" and **onsemi** makes no warranty, representation or guarantee regarding the accuracy of the information, product features, availability, functionality, or suitability of its products for any particular purpose, nor does **onsemi** assume any liability arising out of the application or use of any product or circuit, and specifically disclaims any and all liability, including without limitation special, consequential or incidental damages. Buyer is responsible for its products and applications using **onsemi** products, including compliance with all laws, regulations and safety requirements or standards, regardless of any support or applications information provided by **onsemi**. "Typical" parameters which may be provided in **onsemi** data sheets and/or specifications can and do vary in different applications and actual performance may vary over time. All operating parameters, including "Typicals" must be validated for each customer application by customer's technical experts. **onsemi** does not convey any license under any of its intellectual property rights nor the rights of others. **onsemi** products are not designed, intended, or authorized for use as a critical component in life support systems or any FDA Class 3 medical devices or medical devices with a same or similar classification in a foreign jurisdiction or any devices intended for implantation in the human body. Should Buyer purchase or use **onsemi** products for any such unintended or unauthorized application, Buyer shall indemnify and hold **onsemi** and its officers, employees, subsidiaries, affiliates, and distributors harmless against all claims, costs, damages, and expenses, and reasonable attorney fees arising out of, directly or indirectly, any claim of personal injury or death associated with such unintended or unauthorized use, even if such claim alleges that **onsemi** was negligent regarding the design or manufacture of the part. **onsemi** is an Equal Opportunity/Affirmative Action Employer. This literature is subject to all applicable copyright laws and is not for resale in any manner.

ADDITIONAL INFORMATION

TECHNICAL PUBLICATIONS:
Technical Library: www.onsemi.com/design/resources/technical−documentation
onsemi Website: www.onsemi.com

ONLINE SUPPORT: www.onsemi.com/support
For additional information, please contact your local Sales Representative at
www.onsemi.com/support/sales