NCV7683GEVB

NCV7683GEVB Evaluation Board User's Manual

Eight (8) Channel Enhanced 100 mA Linear Current Regulator and Controller for Automotive LED Lighting in Daisy Chain Sequencing Application Evaluation Board User's Manual

ON Semiconductor®

www.onsemi.com

EVAL BOARD USER'S MANUAL

Description

Automotive Rear Combination LED Lighting systems often require the electronics to execute a sequence lighting event for a blinker function to indicate directional change in movement. This evaluation board will demonstrate to the user this functionality using NCV7683 devices in a daisy chain fashion along with the typical DC current drive and PWM demonstration.

The three typical control inputs into the system are available through on−board switches or through the pin connections to external controls. The three system control inputs are the STOP, TAIL, and TURN functions. The STOP function displays a 100% duty cycle current through the LEDs. The TAIL function displays a programmable PWM current through the LEDs. The TURN function displays the sequence event through the 8 on−chip channels and through a serial connection through a second series of 8 channels on a second device.

Features

- Sequencing Functionality
- One Out, All Out (Latch Off) Optional Functionality
- STOP, TAIL, TURN (100% Duty Cycle, PWM, Sequencing) Modes
- Flexibility for
  - External LED Connections
  - LED Current Programmability (RSTOP)
  - LED PWM Programmability (RTAIL)
  - Sequence Time Programmability
  - Sequence Interval Programmability
  - STOP, TAIL, TURN External Connections
  - External DIAG Pin Connection

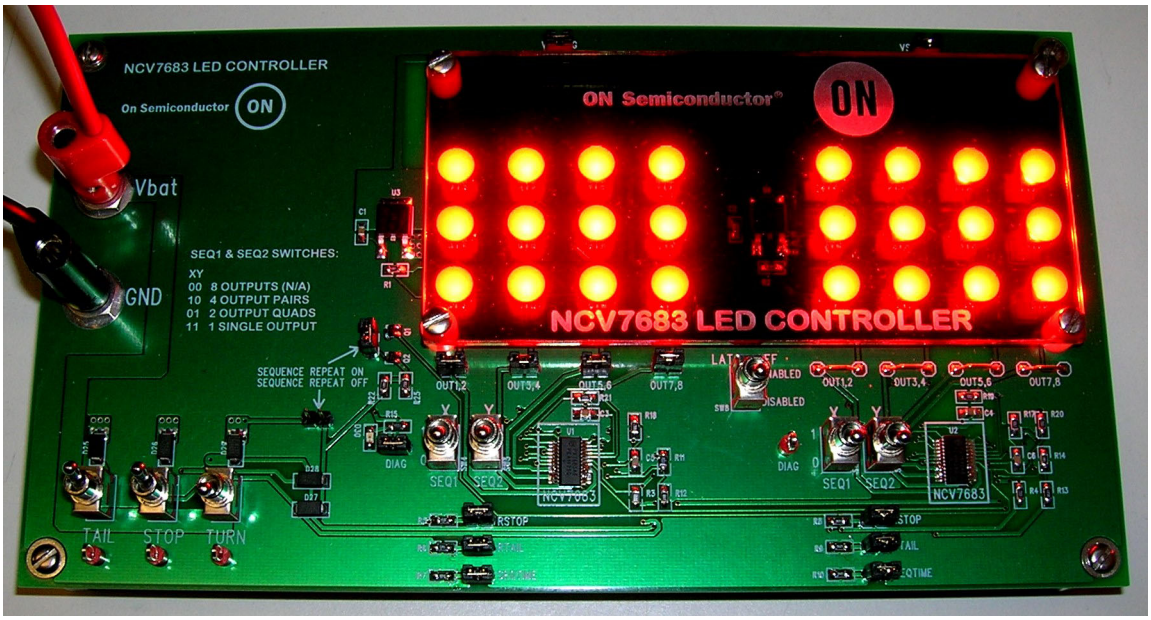

Figure 1. Evaluation Board Picture

© Semiconductor Components Industries, LLC, 2016

July, 2016 − Rev. 2

Publication Order Number:
EVBUM2297/D

Sequencing (TURN)

The major focus of this evaluation board and the NCV7683 is the ability of the device to perform an LED drive sequencing function whereby each string of LEDs is illuminated in a predictive increasing succession. Figure 2 shows the main component connections which are utilized for this function. The combined pair of paralleled outputs of the IC1 are first turned on, and the signal is carried through to IC2 from the output of IC1 (SEQOUT) in a daisy chain fashion to the input of IC2 ($\overline{EN}$). Parallel combinations of outputs increase the current capabilities of each string. Combining 2 outputs increase the current capability from 100 mA to 200 mA. Internal timing circuitry to the output of SEQOUT insures String4 is fully illuminated before the turn−on signal is transferred out to IC2.

Programming features of the NCV7683 allow for the programmed pairs to turn−on at the same time. Additional combinations of combined outputs are also designed into the part. Consult the datasheet for further details.

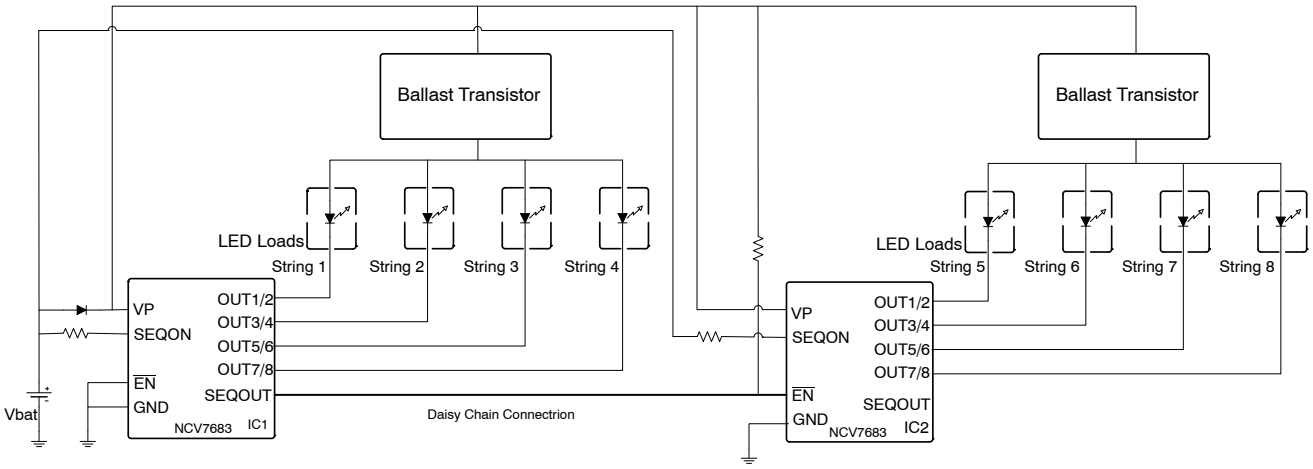

Figure 2. Focus Demonstration

STOP

The STOP function displays the highest system output current at 100% duty cycle. Using the STOP switch activates this function. An alternative connection The current is programmable with a resistor on the RSTOP pin to ground. Jumpers J12 and J15 provide isolation of pin 5 of the NCV7683 allowing access to the pin for alterative selection of output current. The range of programmability is from 15 mA to 100 mA using the equation:

$$Iout = \frac{150}{RSTOP}$$

where RSTOP is the resistor value.

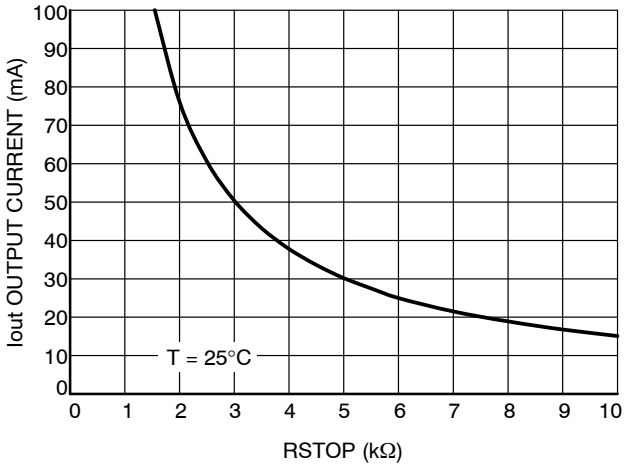

Figure 3. Iout vs. RSTOP

TAIL

The TAIL function displays a lower equivalent output current in the system. This provides a lower illumination of the LEDs. This is achieved with a varied duty cycle of the output current. The duty cycle is programmable with a resistor on the RTAIL pin to ground. Jumpers J13 and J16 provide isolation of pin 6 of the NCV7683 allowing access to the pin for alternative selection of output duty cycle current. The range of programmability is from 0% duty cycle to 100% duty cycle using the equation:

$$RTAIL = 1.8 \times RSTOP\ (DC + 0.22)$$

where DC = duty cycle expressed in fractional form.

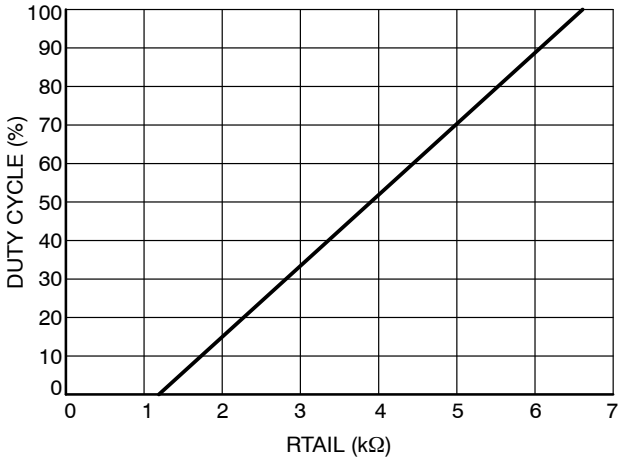

Figure 4. Duty Cycle vs. RTAIL

Sequence Time

The sequence time is defined as the time from OUT1 turn on to SEQOUT going low and is programmable through the SEQTIME pin using a resistor to ground. Jumpers J14 and J17 provide isolation of pin 7 of the NCV7683 allowing access to the pin for alternative selection of sequence time. The range of programmability is from 50 msec to 500 msec using SEQTIME resistor values of 1 K to 10 K where 1 K will program 50 msec and 10 K will program 500 msec.

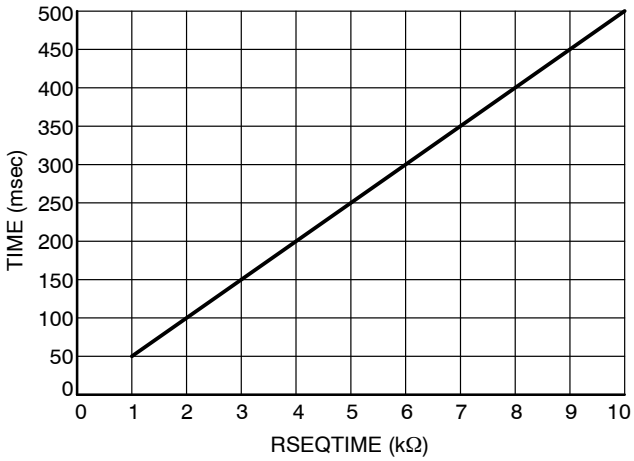

Figure 5. (Sequence Time / Re−Enable Time) vs. RSEQTIME

Latch Off (“One out, All out)

To improve user aesthetics, the system design can utilize the Latch Off function. When using Latch Off, all outputs will become latched off when any one of the 8 outputs experiences an open circuit condition. This is defined (at 50 mA) in the electrical parameter “Open Circuit Detection Threshold” and has limits between 35% and 65% of the output current. The NCV7683 eval board has a switch for Latch off. The Latch off function is activated with the switch up and deactivated with the switch down. The Latch off switch provides direct access to the LObar pin on the NCV7683. Grounding the LObar pin on the IC enables the function.

DIAG

The DIAG pin of the NCV7683 provides system feedback for conditions:

1. Output open circuit.
2. Set Back Current Limit down 20%.
3. Thermal shutdown.
4. RSTOP Current Limit.

An LED indicator with a current setting resistor provides illumination of these conditions. Jumper J19 and TP9 provide access to these pins for the user to use off−board.

External LEDs

The NCV7683GEVB is compatible for use with external LEDs.

To use external diodes driven from IC1,

1. Remove J9 (Vstring)
2. Replace with the Anode of your external LED string (connect to the post on the right).
3. Remove your selection of J1−J4 (OUTx,y).
4. Connect the Cathode of your external LED string (connect to the post on the right).

The operation of the NCV7684 evaluation board works as a standalone presentation for the customer highlighting the built−in sequencing function often used in automotive turn signals. Jumpers are provided for flexibility of customer specific designs with external LEDs and programming of the current, duty cycle, sequencing time, and sequencing output combinations. External control points are also provided in addition to the on−board control switches. The user must adhere to the absolute maximum ratings when using off−board connections.

Table 1. ABSOLUTE MAXIMUM RATINGS

Rating	Value	Unit
Supply Voltage to board (Vbat)	−40 to 40	V
STOP, TAIL, TURN	−40 to 40	V
LED Current Source (OUT1,2, OUT3,4, OUT5,6, OUT7,8)	200	mA
Output Pin Voltage OUT1,2, OUT3,4, OUT5,6, OUT7,8)	−0.3 to 40	V
Output Pin Voltage (RTAIL, RSTOP, SEQTIME)	−0.3 to 3.6	V
DIAG	−0.3 to 40	V
Vstring	−0.3 to 40	V
Junction Temperature (NCV7683)	−40 to 150	°C
Junction Temperature (Evaluation Board)	−40 to 105	°C

Stresses exceeding those listed in the Maximum Ratings table may damage the device. If any of these limits are exceeded, device functionality should not be assumed, damage may occur and reliability may be affected.

Table 2. RECOMMENDED BOARD OPERATING CONDITIONS

Rating	Value		Unit
	Min	Max	
External Supply Voltage (Vbat)		28	V
LED Current Source		200	mA
Junction Temperature (NCV7683)	−40	150	°C

Table 3. PIN FUNCTION DESCRIPTION

Connector	Pin Number	Terminal Name	Description
Power	J11, Vbat	Vbat	Power supply input voltage (14V).
	J24, GND	GND	Ground.
Test Points	J12, J15	RSTOP	Programmable DC current.
	J13, J16	RTAIL	Programmable duty cycle.
	J14, J17	RSEQ	Programmable sequence time.
	J9, J10	VSTRING	Connection to LED ANODES.
	J19	DIAG	DIAG Open Drain output (IC1 & IC2).
	J18	Sequence Repeat On	Jumper 18 (without J50) repeats sequence function.
	J50	Sequence Repeat Off	Jumper J50 (without J18) displays a single sequence event.
	J1, J2, J3, J4	OUT1,2, OUT3,4, OUT5,6, OUT7,8	Current outputs for IC1.
	J5, J6, J7, J8	OUT1,2, OUT3,4, OUT5,6, OUT7,8	Current outputs for IC2.

User Interface Locations

Figure 6 shows all the user interface locations.

This lists all the user options available on the evaluation board.

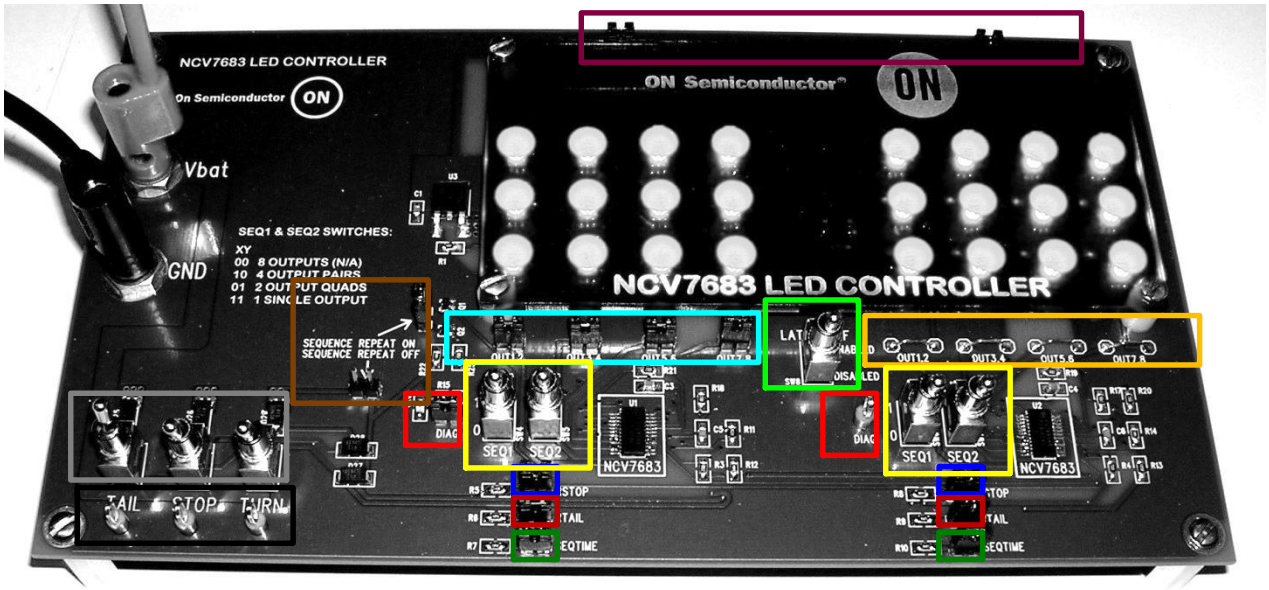

Figure 6. User Interface Locations

Black – STOP, TAIL, TURN external connections.

Grey – STOP, TAIL, TURN switches.

Dark Blue (2) – STOP programming jumper.

Red (2) – TAIL programming jumper.

Green (2) – SEQTIME jumper.

Purple (2) – Vstring jumper.

Light Blue (4) – OUT1,2, OUT3,4, OUT5,6, OUT7,8 open circuit jumpers (IC1).

Orange (4) – OUT1,2, OUT3,4, OUT5,6, OUT7,8 output posts (IC2).

Yellow (2 sets) – SEQ1, SEQ2 switches.

Bright Green – Latch Off switch.

Bright Red – DIAG jumper / post.

Brown – Sequence Repeat on / off jumpers.

OPERATIONAL GUIDELINES

The material necessary to successfully use the evaluation board is listed below.

- NCV7683 Evaluation Board
- 14V Power Supply Capable of drive 1A.

Configure the Board

Typical Board configuration with on−board components.

1. Connect all jumpers on the board with the exception of Jumper 50.
   This includes J1−J20. This sets the board up to display sequencing. To use the board without sequencing, remove Jumper 18 (“sequence repeat on”), and connect Jumper 50 (“sequence repeat off”).
2. Connect the 14 V power supply.
3. Turn on the power supply.

Increasing the LED current

Change the current programming resistor.

Reference the STOP section.

Change the Duty Cycle

Change the duty cycle programming resistor.

Reference the TAIL section.

Change the Sequence Time

Change the Sequence time resistor.

Reference the Sequence Time section.

Latch Off

Switch up – Latch Off activated.

Switch down – Latch Off deactivated.

DIAG

The on−board LED will illuminate when DIAG reports a fault.

Reporting can be taken off−board.

Use External LEDs

Reference the External LEDs section for instructions.

BILL OF MATERIALS

Table 4. NCV7683 DAISY CHAIN EVALUATION BOARD BILL OF MATERIALS

Designator	Qty	Description	Value	Toler-ance	Footprint	Manufacturer	Manufacturer Part Number	Substitution Allowed
C1, C2	2	Loop Stabilization Capacitor	0.22 μF	10%	0805	KEMET	C0805C224K5RACTU	Yes
C3, C4	2	Input Capacitor	0.68 μF	10%	0805	KEMET	C0805C684K5RACTU	Yes
C5, C6	2	Debounce Capacitor	10 nF	10%	0805	KEMET	C0805C103K5RACTU	Yes
C10, C11	2	LED Storage Capacitor	100 nF	10%	0805	KEMET	C0805C104K5RACTU	Yes
D1−D24	24	Display LEDs	led_diode	−−−	G6SP	OSRAM	LRG6SP−CADB−1−1	Yes
D25−D29	5	Steering Diode	MRA4003	−−−	SMA_DIODE	ON Semiconductor	MRA4003T3G	Yes
D30, D31	1	DIAG Reporting LED	led_diode	−−−	0805	LITE−ON INC	LTST−C171GKT	Yes
J1−J4, J9, J10, J12−J19, J50	15	Jumper Posts 100 mil spacing	JUMPER	−−−	JMP	3M	961102−6404−AR	Yes
J1−J4, J9, J10, J12−J19, J50	15	Jumper	−−−	−−−	N/A	SULLINS CONNECTOR SOLUTIONS	QPC02SXGN−RC	Yes
J5−J8	4	Jumper 300 mil spacing	JUMPER	−−−	JMP300	MILL−MAX	999−11−113−10−000000	Yes
J11	1	Banana Jack	Vbat	−−−	BANANA	CINCH CONNECTIVITY SOLUTIONS	108−0740−001	Yes
J24	1	Banana Jack	GND	−−−	BANANA	CINCH CONNECTIVITY SOLUTIONS	108−0740−001	Yes
Q1, Q2	2	Sequencing Transistor Switch	2N7002W	−−−	SOT23M4	ON Semiconductor	ONC 2N7002WT1G/BKN	Yes
R1, R2, R22	3	Logic Resistors	1K	1%	0805	VISHAY DALE	CRCW08051K00FKEA	Yes
R3, R4, R7, R10, R17−R21, R25	12	Logic & Programming Resistors	10K	1%	0805	VISHAY DALE	CRCW080510K0FKEA	Yes
R5, R8	2	RSTOP Program Resistor	3.01K	1%	0805	VISHAY DALE	CRCW08053K01FKEA	Yes
R6, R9	2	RTAIL Program Resistor	1.62K	1%	0805	VISHAY DALE	CRCW08051K62FKEA	Yes
R11, R13	2	Vstring Program Resistor	9.53K	1%	0805	VISHAY DALE	CRCW08059K53FKEA	Yes
R12, R14	2	Vstring Program Resistor	1K	1%	0805	VISHAY DALE	CRCW08051K00FKEA	Yes
R15	1	DIAG LED Current Setting Resistor	4.99k	1%	0805	VISHAY DALE	CRCW08054K99FKEA	Yes
SW1−SW8	8	User Interface Switches	STOP	−−−	MINITOGGLE	C & K COMPONENTS	T101MH9CBE	Yes
TP6−TP8	3	RCL Test Inputs	−−−	−−−	TP	KEYSTONE ELECTRONICS	5010	Yes
TP9	1	DIAG Pin Test Point	−−−	−−−	TP	KEYSTONE ELECTRONICS	5010	Yes
U1, U2	2	NCV7683 (SSOP−24 epad)	−−−	−−−	SSOP24NB_EP	ON Semiconductor	NCV7683DQR2G	No
U3, U4	2	NVD2955	−−−	−−−	DPAK3_SMD	ON Semiconductor	NVD2955T4G	No

SCHEMATIC

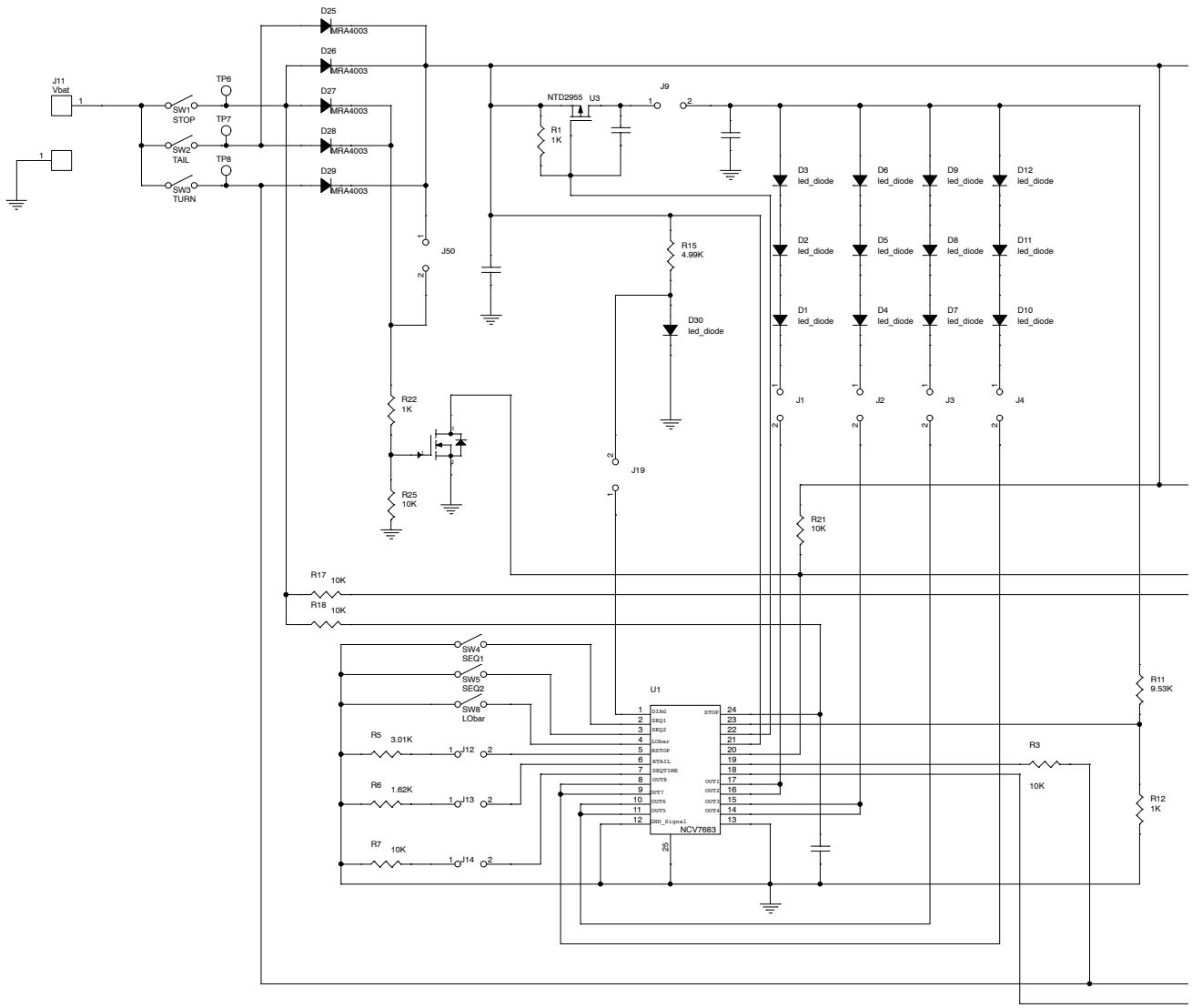

Figure 7. Evaluation Board Schematic (1/2)

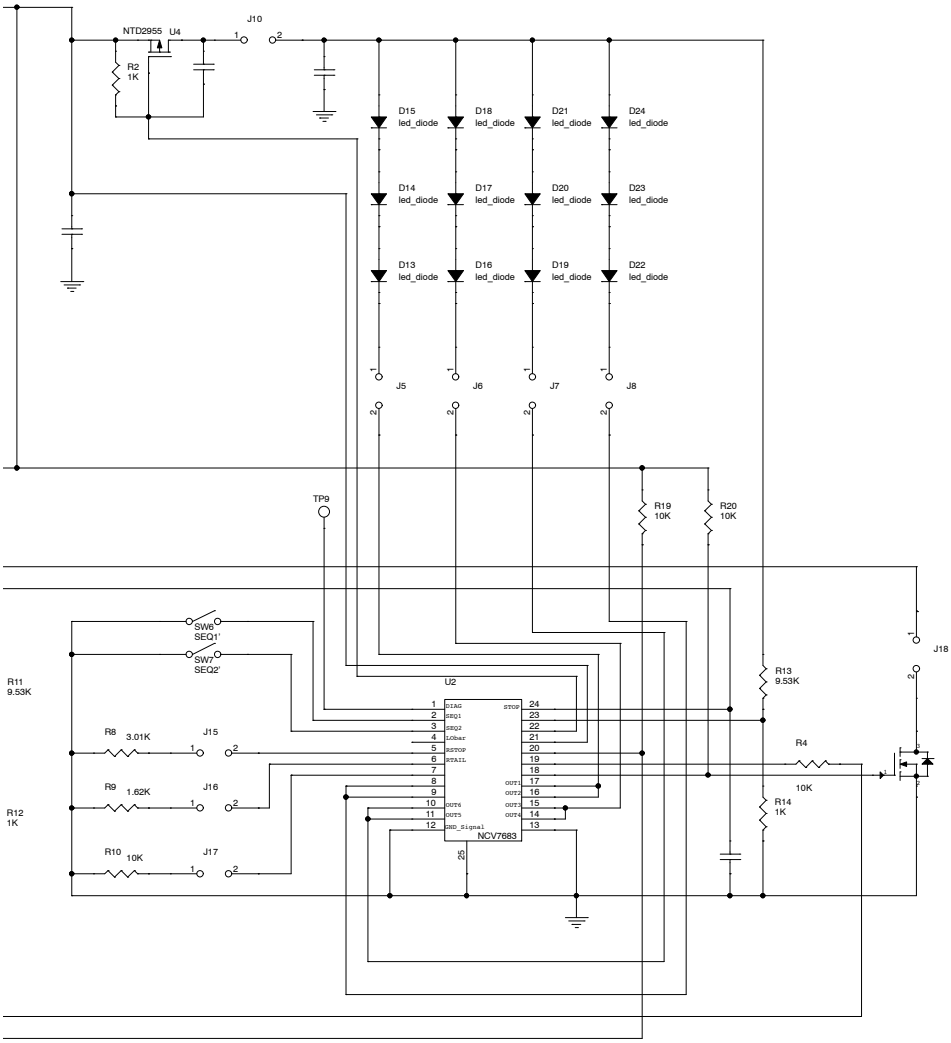

Figure 8. Evaluation Board Schematic (2/2)

onsemi, onsemi, and other names, marks, and brands are registered and/or common law trademarks of Semiconductor Components Industries, LLC dba "**onsemi**" or its affiliates and/or subsidiaries in the United States and/or other countries. **onsemi** owns the rights to a number of patents, trademarks, copyrights, trade secrets, and other intellectual property. A listing of **onsemi**'s product/patent coverage may be accessed at www.onsemi.com/site/pdf/Patent−Marking.pdf. **onsemi** is an Equal Opportunity/Affirmative Action Employer. This literature is subject to all applicable copyright laws and is not for resale in any manner.

The evaluation board/kit (research and development board/kit) (hereinafter the "board") is not a finished product and is not available for sale to consumers. The board is only intended for research, development, demonstration and evaluation purposes and will only be used in laboratory/development areas by persons with an engineering/technical training and familiar with the risks associated with handling electrical/mechanical components, systems and subsystems. This person assumes full responsibility/liability for proper and safe handling. Any other use, resale or redistribution for any other purpose is strictly prohibited.

THE BOARD IS PROVIDED BY ONSEMI TO YOU "AS IS" AND WITHOUT ANY REPRESENTATIONS OR WARRANTIES WHATSOEVER. WITHOUT LIMITING THE FOREGOING, ONSEMI (AND ITS LICENSORS/SUPPLIERS) HEREBY DISCLAIMS ANY AND ALL REPRESENTATIONS AND WARRANTIES IN RELATION TO THE BOARD, ANY MODIFICATIONS, OR THIS AGREEMENT, WHETHER EXPRESS, IMPLIED, STATUTORY OR OTHERWISE, INCLUDING WITHOUT LIMITATION ANY AND ALL REPRESENTATIONS AND WARRANTIES OF MERCHANTABILITY, FITNESS FOR A PARTICULAR PURPOSE, TITLE, NON−INFRINGEMENT, AND THOSE ARISING FROM A COURSE OF DEALING, TRADE USAGE, TRADE CUSTOM OR TRADE PRACTICE.

onsemi reserves the right to make changes without further notice to any board.

You are responsible for determining whether the board will be suitable for your intended use or application or will achieve your intended results. Prior to using or distributing any systems that have been evaluated, designed or tested using the board, you agree to test and validate your design to confirm the functionality for your application. Any technical, applications or design information or advice, quality characterization, reliability data or other services provided by **onsemi** shall not constitute any representation or warranty by **onsemi**, and no additional obligations or liabilities shall arise from **onsemi** having provided such information or services.

onsemi products including the boards are not designed, intended, or authorized for use in life support systems, or any FDA Class 3 medical devices or medical devices with a similar or equivalent classification in a foreign jurisdiction, or any devices intended for implantation in the human body. You agree to indemnify, defend and hold harmless **onsemi**, its directors, officers, employees, representatives, agents, subsidiaries, affiliates, distributors, and assigns, against any and all liabilities, losses, costs, damages, judgments, and expenses, arising out of any claim, demand, investigation, lawsuit, regulatory action or cause of action arising out of or associated with any unauthorized use, even if such claim alleges that **onsemi** was negligent regarding the design or manufacture of any products and/or the board.

This evaluation board/kit does not fall within the scope of the European Union directives regarding electromagnetic compatibility, restricted substances (RoHS), recycling (WEEE), FCC, CE or UL, and may not meet the technical requirements of these or other related directives.

FCC WARNING − This evaluation board/kit is intended for use for engineering development, demonstration, or evaluation purposes only and is not considered by **onsemi** to be a finished end product fit for general consumer use. It may generate, use, or radiate radio frequency energy and has not been tested for compliance with the limits of computing devices pursuant to part 15 of FCC rules, which are designed to provide reasonable protection against radio frequency interference. Operation of this equipment may cause interference with radio communications, in which case the user shall be responsible, at its expense, to take whatever measures may be required to correct this interference.

onsemi does not convey any license under its patent rights nor the rights of others.

LIMITATIONS OF LIABILITY: **onsemi** shall not be liable for any special, consequential, incidental, indirect or punitive damages, including, but not limited to the costs of requalification, delay, loss of profits or goodwill, arising out of or in connection with the board, even if **onsemi** is advised of the possibility of such damages. In no event shall **onsemi**'s aggregate liability from any obligation arising out of or in connection with the board, under any theory of liability, exceed the purchase price paid for the board, if any.

The board is provided to you subject to the license and other terms per **onsemi**'s standard terms and conditions of sale. For more information and documentation, please visit www.onsemi.com.

ADDITIONAL INFORMATION

TECHNICAL PUBLICATIONS:
Technical Library: www.onsemi.com/design/resources/technical−documentation
onsemi Website: www.onsemi.com

ONLINE SUPPORT: www.onsemi.com/support
For additional information, please contact your local Sales Representative at www.onsemi.com/support/sales