EVBUM2664

NCV7692 High-current Daylight Running Light Evaluation Board User's Manual

ON Semiconductor®

www.onsemi.com

EVAL BOARD USER'S MANUAL

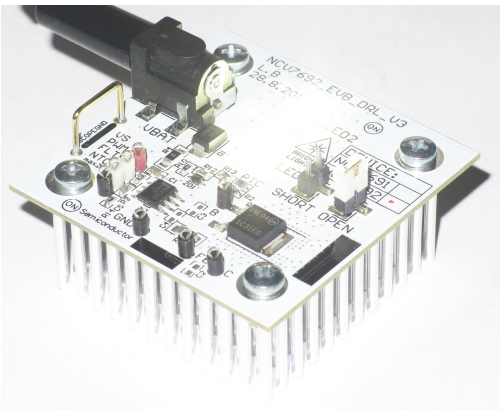

Figure 1. NCV7692 Evaluation Board

INTRODUCTION

The evaluation board demonstrates high−current daylight running light (DRL) solution. The board regulates constant current of 0.54 A through two on−board white high power LEDs in the wide range of the supply voltage. The current is reduced for the board temperature above 85°C. The cooling is provided through passive heat sink mounted on the bottom side of the board. In case of LEDs short or opening, the current source is disabled and the fault may be detected by the ECU diagnostics.

EVALUATION BOARD FEATURES

- Wide range of supply voltage: 7 to 40 V (thermally limited)
- Two high−brightness on−board white LEDs
- Nominal LED current of 0.54 A
- Over−temperature current fold−back protection
- LED short−circuit and open−load emulation jumpers
- Positions for optional EMC capacitors
- One−side components assembly
- Passive cooling (heat sink)

Table 1. ABSOLUTE MAXIMUM RATINGS

Rating	Value	Unit
Supply Voltage (Vbat)	−40 to +40	V
LED string Current (thermally limited)	1	A
Junction Temperature (NCV7692, NSS1C301E, CREE−XPGBWT)	−40 to +150	°C
Ambient Temperature	−40 to +105	°C

Stresses exceeding those listed in the Maximum Ratings table may damage the device. If any of these limits are exceeded, device functionality should not be assumed, damage may occur and reliability may be affected.

Table 2. RECOMMENDED BOARD OPERATING CONDITIONS

Rating	Value	Unit
Supply Voltage (Vbat) (thermally limited)	7 to 16	V
Rated LED string Current (for Tair < +70°C)	0.54	A
Open−Load or Short−Circuit board consumption (VS = 14 V)	max. 9	mA
Ambient Temperature (for rated LED current)	−40 to +70	°C

Functional operation above the stresses listed in the Recommended Operating Ranges is not implied. Extended exposure to stresses beyond the Recommended Operating Ranges limits may affect device reliability.

© Semiconductor Components Industries, LLC, 2019

October, 2019 − Rev. 0

Publication Order Number:
EVBUM2664/D

DAYLIGHT RUNNING LIGHT EVALUATION BOARD SCHEMATIC

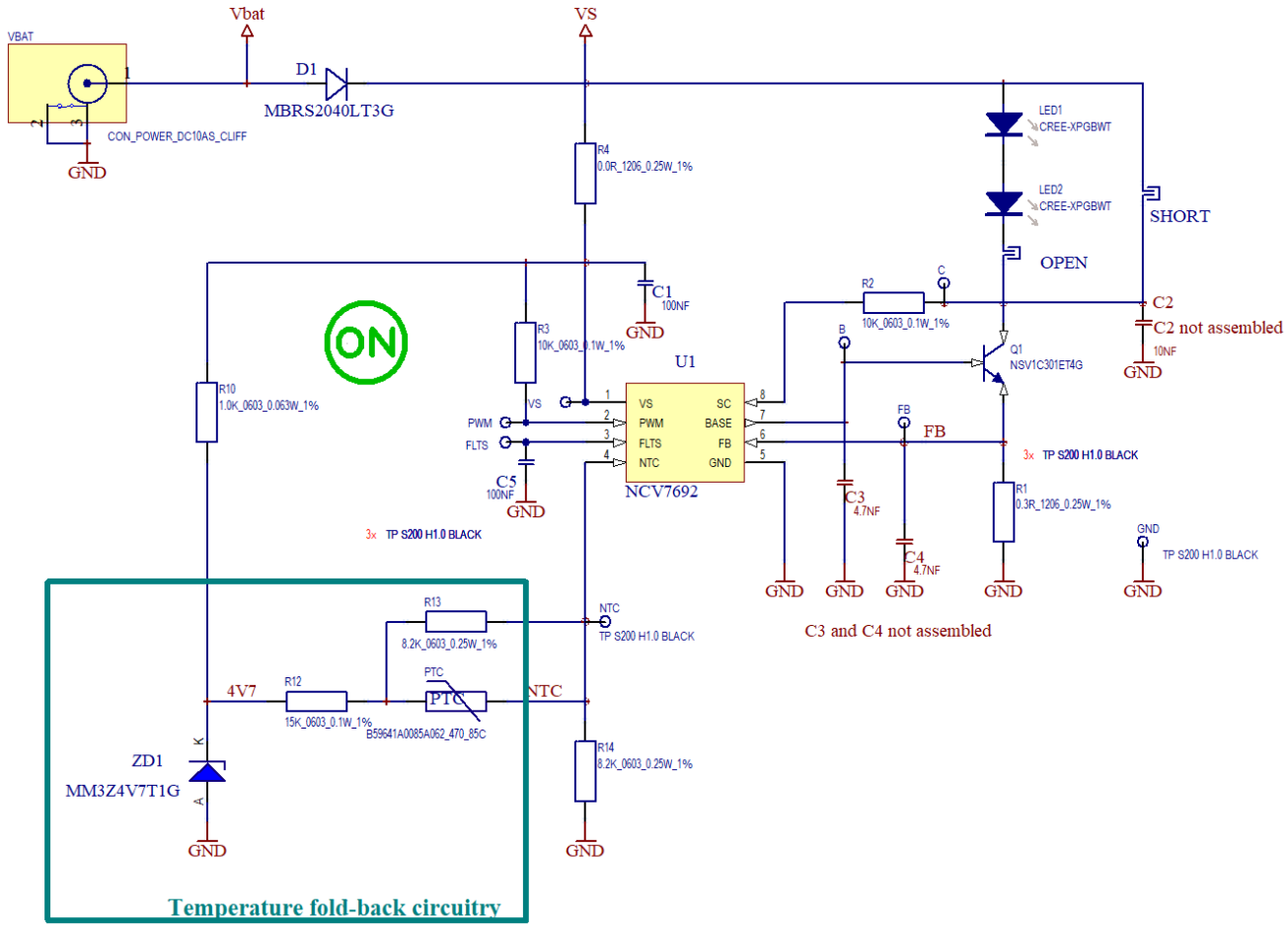

Figure 2. NCV7692 High−current Daylight Running Light Evaluation Board Schematic

Table 3. INTERFACE FUNCTION DESCRIPTION

Connector Name	Connector Type	Description / Function
VBAT	2.1 mm DC supply	Supply battery input
OPEN	SMD Jumper	Removing the jumper emulates open LED condition
SHORT	SMD Jumper	Shorting terminals by the jumper emulates short LED condition
B	Test Point	BASE output of NCV7692 / NPN base
C	Test Point	NPN collector
FB	Test Point	FB output of NCV7692 / NPN emitter

GETTING STARTED

The board is supplied through a standard 5.5 x 2.1 mm DC connector. Supply voltage ranges from 7 to 16 V. Below 7 V, the current through the LEDs starts decreasing. For battery voltage above 16 V, the board temperature is the limitation.

Because the VS Open Load Disable Threshold (5.1 V) is lower than VF of the LEDs (6 V), it may happen that device will detect Open Load detection during the slow ramp−ups on the supply pin.

Please make sure that the ramp−up of the power supply is faster than blanking time of the Open Load detection, especially when the laboratory power supplies with controlled slopes are used. Otherwise LEDs will only blink and the NCV7692 will report an error.

The thermal fold−back circuitry ensures the board temperature remains within the safe range (see following chapter for details).

Two jumpers on the board emulate LEDs short or opening. By default OPEN jumper is closed while SHORT terminals are not shorted.

The LEDs current is defined by R1 resistor. By default, it is set to 540 mA, but may be changed using following formulas:

- With no thermal fold−back (NTC pin grounded):

$$R1 = \frac{\text{FB Regulation Voltage}}{I_{LED}} \approx \frac{0.15}{I_{LED}} \qquad \text{(eq. 1)}$$

- With thermal fold−back circuitry on NTC pin:

$$R1 = \frac{V_{NTC}}{10 \cdot I_{LED}} \approx \frac{1.62}{10 \cdot I_{LED}} = \frac{0.162}{I_{LED}} \qquad \text{(eq. 2)}$$

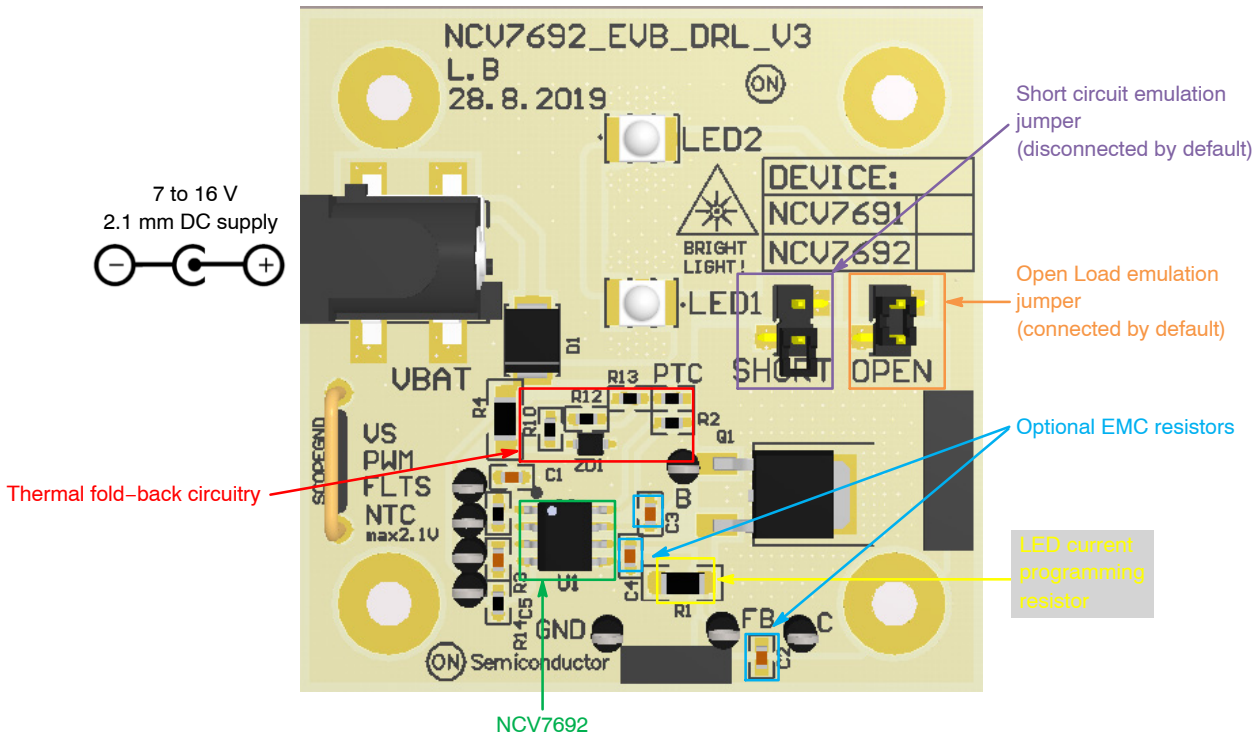

Figure 3. NCV7692 High−current DRL Board Picture

MODULES CONTROL STRATEGY

The board is designed to operate in standard “One Wire Driver Body ECU” architecture. The dimming might be provided through the PWM applied to the High−side SmartFet in the body ECU.

At the same time, the SmartFET allows diagnosis of the failure on the LED module (open load or short−circuit) (see Figure 4). In case of both LED short and disconnection, NCV7692 disables the NPN bipolar.

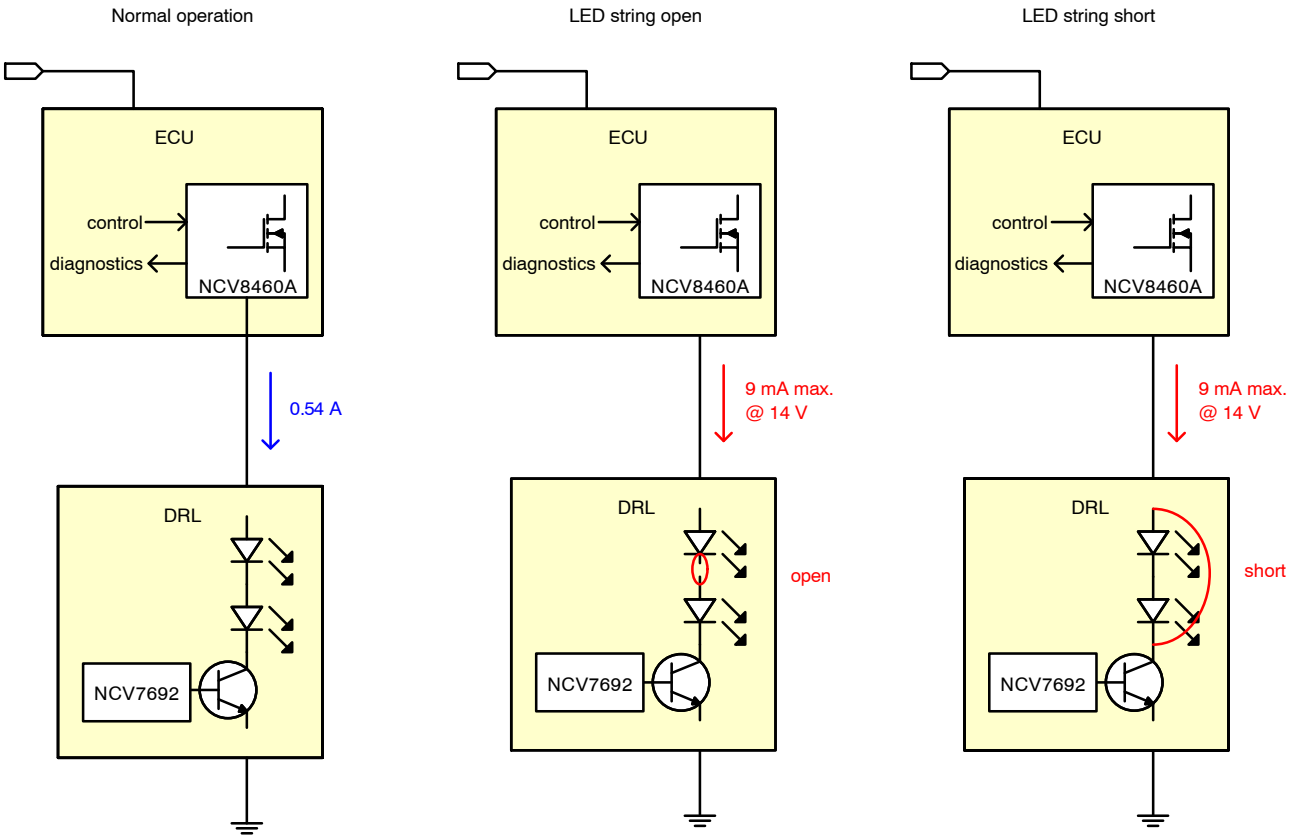

Figure 4. One Wire Driver Body ECU Diagram

THERMAL CONSIDERATIONS OF THE BOARD

As the board dissipation is typ. 7.3 W at 13.5 V battery supply, the thermal aspects should be taken into account for the board design. The main limitations are LED lifetime vs. operating temperature and NPN bipolar maximum junction temperature.

The board was designed to operate at the nominal current with ambient temperature of up to 70°C on standard FR4 PCB substrate and passive cooling with following low−cost thermal improvements:

- Thin FR4 substrate (1.0 mm)
- Thick PCB copper plating (70 μm)
- Solder filled vias around under LEDs and BJT
- Aluminum heat sink mounted to the bottom of the board, isolated by thermally conductive foil

If higher power capability is required, one or more of the following steps in the board design can be made to further improve the thermal performance:

- Cu−filled thermal vias
- Using aluminum PCB substrate instead of FR4
- Active cooling

THERMAL FOLD−BACK

To the protect power dissipating devices on the board (LEDs, NPN bipolar transistor), a circuit reducing LED current at high board temperatures is included (Figure 5).

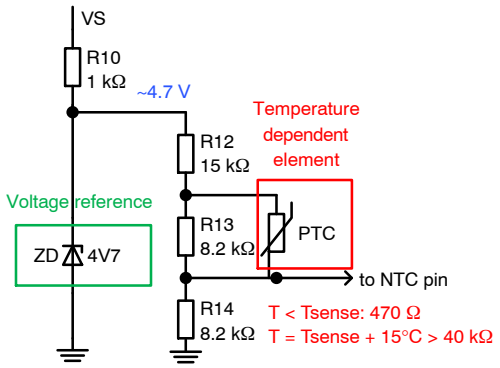

Figure 5. Thermal Fold−back Circuitry

The circuit consists of a voltage reference (ZD1 supplied via R10) and temperature dependent resistor divider. A thermistor with positive temperature dependency (PTC) is used for temperature sensing. For temperatures below the PTC sensing temperature, the thermistor has low resistance (typ. 470 Ω), so the circuitry output voltage is given by R12 and R14 while for high temperatures the reference voltage drops rapidly (Figure 6). R13 ensures the voltage on NTC input does not fall below the NTC Detection Level (max. 300 mV) at high temperature, which would result into a switch−over to the internal voltage reference of NCV7692.

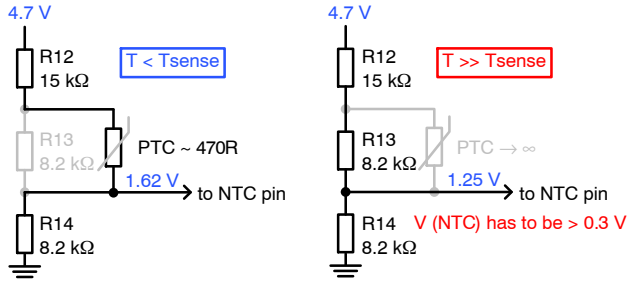

Figure 6. Thermal Fold−back CIrcuitry at Low / High Temperature

The optimal Zener voltage in terms of the temperature independency is usually between 4 and 5 V. At the same time, it should be as low as possible to allow a low−battery operation. 4V7 Zener diode is recommended as a good tradeoff. (Figure 7).

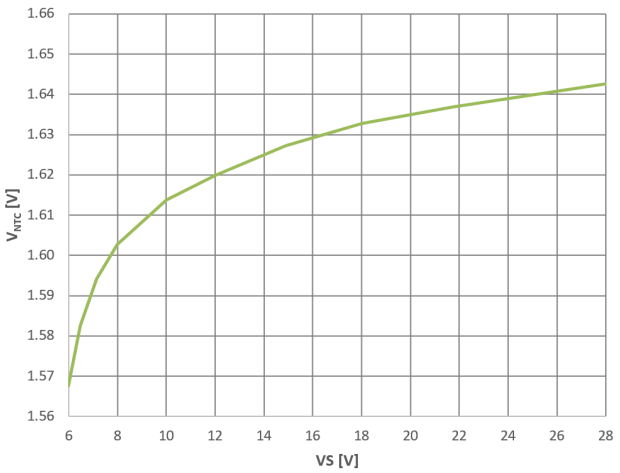

Figure 7. NTC Voltage vs. Supply Voltage (Tpcb = 25°C)

The sensing temperature (PTC parameter) has to be chosen carefully with respect to the heat distribution over the board and thermal properties of the power dissipating components. For PTC type B59641A0085A062, the current fold−back reduces the reference voltage on the NTC pin and thus LED current above the PTC component temperature of ~70°C (Figure 8).

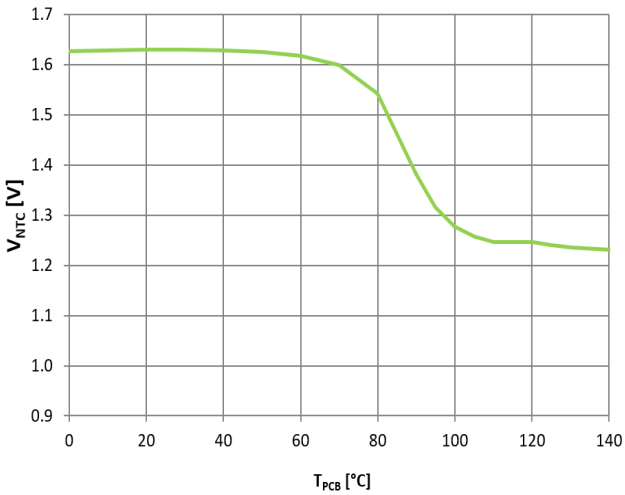

Figure 8. NTC Voltage vs. Board Temperature (VS = 12 V)

If the thermal fold−back feature is not required, components R10, R12, R13, ZD1 and PTC do not need to be assembled and NTC pin should be tied to GND (directly or via R14).

EMC RECOMMENDATIONS

If extensive EMC immunity level is required, C2, C3 and C4 capacitors can improve the EMC performance. Using C3 is usually sufficient against disturbances from the supply line. Capacitors C2 and C4 may improve the performance especially in the setup with external (off−board) LEDs.

PCB DRAWINGS

Assembly Drawings

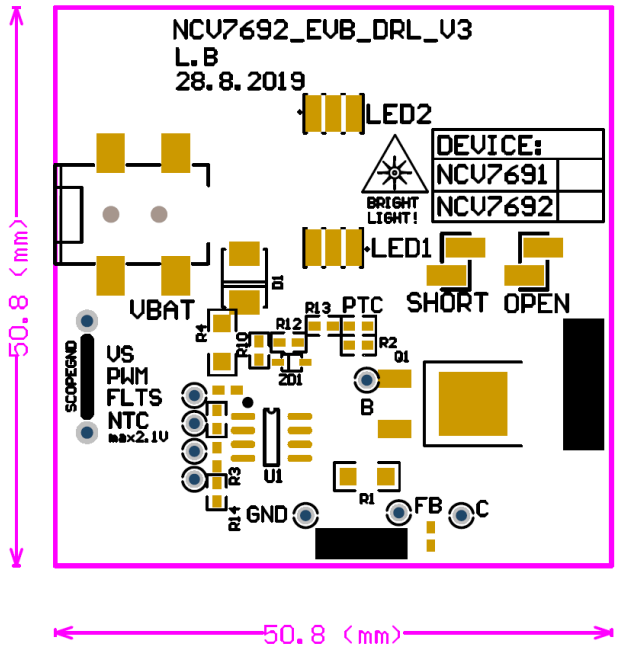

Figure 9. NCV7692 DRL EVB PCB Top Assembly Drawing

Composite Drawings

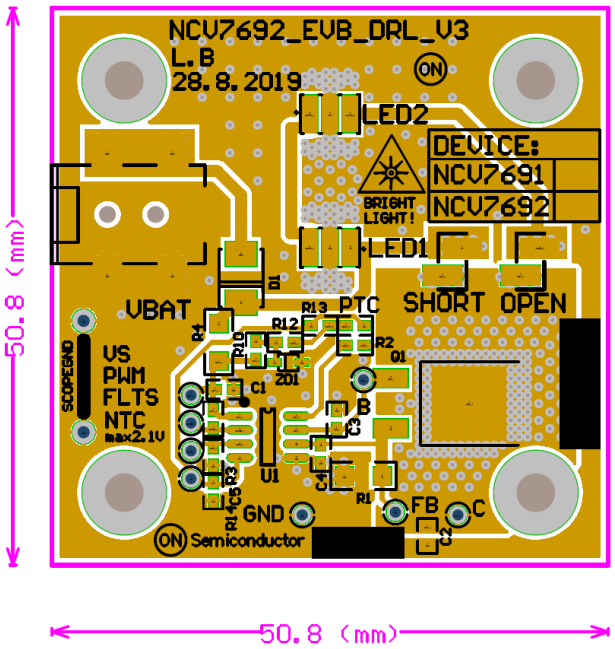

Figure 10. NCV7692 DRL EVB PCB Top Composite Drawing

PCB Preview

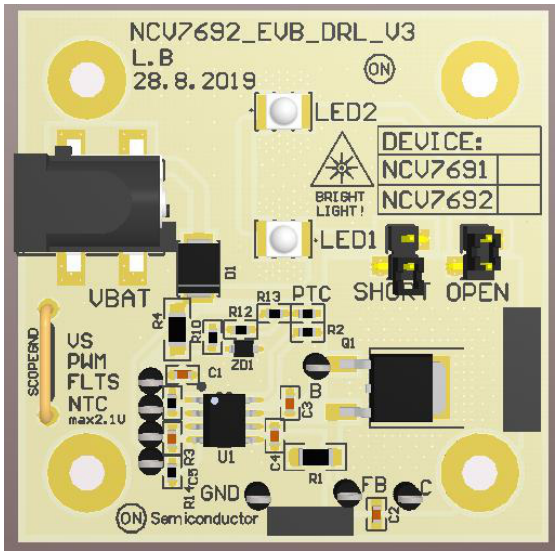

Figure 11. NCV7692 DRL EVB PCB Top Side View

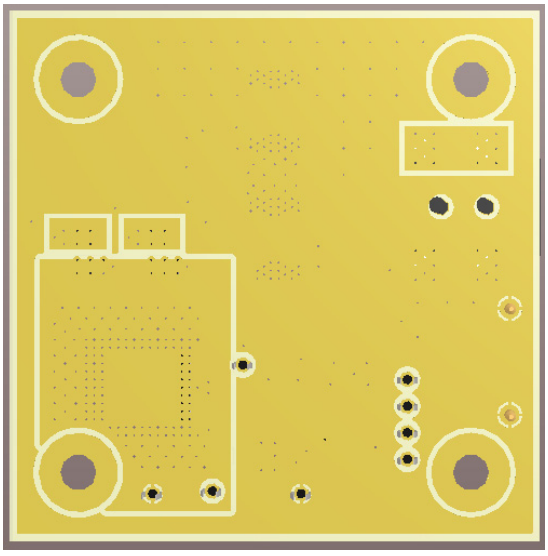

Figure 12. NCV7692 DRL EVB Bottom Side View

REFERENCES

1. ON Semiconductor, NCV7692, Current Controller for Automotive LED Lamps, Rev.0, April 2018.
2. ON Semiconductor, NSS1C301ET4G, 100 V, 3.0 A, Low $V_{CE(sat)}$ NPN Transistor, Rev.5, March 2016.
3. EPCOS, PTC thermistors as limit temperature sensors, Series: B59421, B59641, B59721, March 2014

onsemi, onsemi, and other names, marks, and brands are registered and/or common law trademarks of Semiconductor Components Industries, LLC dba "**onsemi**" or its affiliates and/or subsidiaries in the United States and/or other countries. **onsemi** owns the rights to a number of patents, trademarks, copyrights, trade secrets, and other intellectual property. A listing of **onsemi**'s product/patent coverage may be accessed at www.onsemi.com/site/pdf/Patent−Marking.pdf. **onsemi** is an Equal Opportunity/Affirmative Action Employer. This literature is subject to all applicable copyright laws and is not for resale in any manner.

The evaluation board/kit (research and development board/kit) (hereinafter the "board") is not a finished product and is not available for sale to consumers. The board is only intended for research, development, demonstration and evaluation purposes and will only be used in laboratory/development areas by persons with an engineering/technical training and familiar with the risks associated with handling electrical/mechanical components, systems and subsystems. This person assumes full responsibility/liability for proper and safe handling. Any other use, resale or redistribution for any other purpose is strictly prohibited.

THE BOARD IS PROVIDED BY ONSEMI TO YOU "AS IS" AND WITHOUT ANY REPRESENTATIONS OR WARRANTIES WHATSOEVER. WITHOUT LIMITING THE FOREGOING, ONSEMI (AND ITS LICENSORS/SUPPLIERS) HEREBY DISCLAIMS ANY AND ALL REPRESENTATIONS AND WARRANTIES IN RELATION TO THE BOARD, ANY MODIFICATIONS, OR THIS AGREEMENT, WHETHER EXPRESS, IMPLIED, STATUTORY OR OTHERWISE, INCLUDING WITHOUT LIMITATION ANY AND ALL REPRESENTATIONS AND WARRANTIES OF MERCHANTABILITY, FITNESS FOR A PARTICULAR PURPOSE, TITLE, NON−INFRINGEMENT, AND THOSE ARISING FROM A COURSE OF DEALING, TRADE USAGE, TRADE CUSTOM OR TRADE PRACTICE.

onsemi reserves the right to make changes without further notice to any board.

You are responsible for determining whether the board will be suitable for your intended use or application or will achieve your intended results. Prior to using or distributing any systems that have been evaluated, designed or tested using the board, you agree to test and validate your design to confirm the functionality for your application. Any technical, applications or design information or advice, quality characterization, reliability data or other services provided by **onsemi** shall not constitute any representation or warranty by **onsemi**, and no additional obligations or liabilities shall arise from **onsemi** having provided such information or services.

onsemi products including the boards are not designed, intended, or authorized for use in life support systems, or any FDA Class 3 medical devices or medical devices with a similar or equivalent classification in a foreign jurisdiction, or any devices intended for implantation in the human body. You agree to indemnify, defend and hold harmless **onsemi**, its directors, officers, employees, representatives, agents, subsidiaries, affiliates, distributors, and assigns, against any and all liabilities, losses, costs, damages, judgments, and expenses, arising out of any claim, demand, investigation, lawsuit, regulatory action or cause of action arising out of or associated with any unauthorized use, even if such claim alleges that **onsemi** was negligent regarding the design or manufacture of any products and/or the board.

This evaluation board/kit does not fall within the scope of the European Union directives regarding electromagnetic compatibility, restricted substances (RoHS), recycling (WEEE), FCC, CE or UL, and may not meet the technical requirements of these or other related directives.

FCC WARNING − This evaluation board/kit is intended for use for engineering development, demonstration, or evaluation purposes only and is not considered by **onsemi** to be a finished end product fit for general consumer use. It may generate, use, or radiate radio frequency energy and has not been tested for compliance with the limits of computing devices pursuant to part 15 of FCC rules, which are designed to provide reasonable protection against radio frequency interference. Operation of this equipment may cause interference with radio communications, in which case the user shall be responsible, at its expense, to take whatever measures may be required to correct this interference.

onsemi does not convey any license under its patent rights nor the rights of others.

LIMITATIONS OF LIABILITY: **onsemi** shall not be liable for any special, consequential, incidental, indirect or punitive damages, including, but not limited to the costs of requalification, delay, loss of profits or goodwill, arising out of or in connection with the board, even if **onsemi** is advised of the possibility of such damages. In no event shall **onsemi**'s aggregate liability from any obligation arising out of or in connection with the board, under any theory of liability, exceed the purchase price paid for the board, if any.

The board is provided to you subject to the license and other terms per **onsemi**'s standard terms and conditions of sale. For more information and documentation, please visit www.onsemi.com.

ADDITIONAL INFORMATION

TECHNICAL PUBLICATIONS:
Technical Library: www.onsemi.com/design/resources/technical−documentation
onsemi Website: www.onsemi.com

ONLINE SUPPORT: www.onsemi.com/support
For additional information, please contact your local Sales Representative at www.onsemi.com/support/sales