Scalable Evaluation Board with NCV7685 Twelve Channels LED Linear Current Drivers User's Manual

NCV7685LOWR1GEVB, NCV7685MIDR1GEVB, NCV7685HIGH1GEVB, NCV7685BCMR1GEVB

ON Semiconductor®

www.onsemi.com

EVAL BOARD USER'S MANUAL

Introduction

The Scalable reference design kit / evaluation board demonstrates the Rear Combination Lamp Application with the multiple NCV7685 LED linear current drivers. Three different variants (Low, Mid, High−End) represents different target platforms. With using the same LED display for every variant, the difference stilling performance can be gained.

On−board buck converter creates constant voltage on the top of the LEDs to have lower power dissipation on the devices itself. The boards contains four to six NCV7685 which are used for four different functions: Tail, Stop, Turn and Reverse. The amber color of the LEDs emulates TAIL / STOP functionality. Yellow color of the LEDs demonstrate TURN signal and white color is for Reverse function.

The scalable boards have to be controlled / powered via BCM (Body Control Module) NCV7685BCMR1GEVB. The BCM module can activate appropriate function and the eventual diagnostic can be read−back. The BCM is compatible with all three EVB variants.

Evaluation Board Features

- Wide range of supply voltage: 6 to 18 V
- LED display with 5 x 12 + 4 LEDs
- V_{STRING} voltage 4.3 – 4.9 V
- V_{DD} voltage 3.3V
- Default LED string current
  - 10 mA − Nominal current for TAIL
  - 50 mA − Nominal current for STOP
  - 50 mA − Nominal current for TURN
  - 3 x 25 mA − Nominal current for REV
- Fail Safe capability emulated by CONF pin
- One LED Open−load, emulation jumper
- Supply Diagnostic LEDs
- Test points for every signal

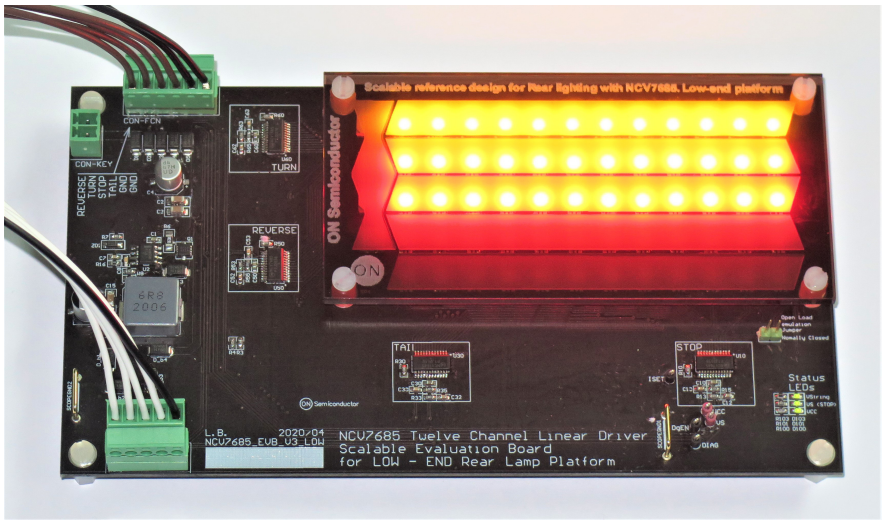

Figure 1. NCV7685LOWR1GEVB Evaluation / Reference Design Kit

© Semiconductor Components Industries, LLC, 2021

May, 2021 − Rev. 0

Publication Order Number:
EVBUM2795/D

Table 1. ABSOLUTE MAXIMUM RATINGS

Rating	Value	Unit
Supply Voltage (V_{BAT})	−28 to +28	V
LED Strings Current	3.3	A
Junction Temperature (NCV7685, NCV8853)	−40 to +150	°C
Junction Temperature (Advanced Power TOPLED OSRAM LED)	−40 to +125	°C
Ambient Temperature	−40 to +105	°C

Table 2. RECOMMENDED BOARD OPERATING CONDITIONS

Rating	Value	Unit
Supply Voltage (Vbat)	6 to 18	V
Rated LED string currents per one LED, for static operation. TAIL / STOP / REVERSE	10 / 50 / 75	mA
Auxiliary Circuits Consumption (DC/DC, LDO, MCU, pull−ups, …)	≈ 32− 47	mA
Ambient Temperature (for rated LED current)	−40 to +105	°C

Table 3. INTERFACE FUNCTION DESCRIPTION

Connector Name	Connector Type	Description / Function
Supply	DC POWER, 2.5MM	Input supply connector, DC 6 – 18V
CON−FCN	1x6 header	Function activation connector
CON−KEY	1x2 header	Key Switch Connector
CON_DIAG	1x5 header	Diagnostic connector
OL1	1x2 header	Open Load emulation jumper
ISET	Test Point	Iset pin of the IC10
DgEN	Test Point	DiagEN pin of IC10
DIAG	Test Point	DIAG pin of IC10
SDA	Test Point	I^2C Data test point (Not applicable for the NCV7685LOWR1GEVB)
SCL	Test Point	I^2C Clock test point (Not applicable for the NCV7685LOWR1GEVB)
VDD	Test Point	VDD supply test point (Not applicable for the NCV7685LOWR1GEVB)
GND	Test Point	GND test point (Not applicable for the NCV7685LOWR1GEVB)
VCC	Test Point	Output VCC reference of the IC10
VS	Test Point	VS supply of the IC10 (STOP function related IC)
SW	Button	MCU reset button (Not applicable for the NCV7685LOWR1GEVB)
ScopeGND1, ScopeGND2	Wire Bridge	Ground wire
J_{RLS}	10pin JTAG header	JTAG header for RSL10 programming (Not applicable for the NCV7685LOWR1GEVB)

GETTING STARTED

Scalable Evaluation board platform contain three variants of the Evaluation controlled by one BCM module. The BCM module is universal and it can be connected to every EVB variant: Low−End, Mid−End or High−End EVB.

The BCM board is supplied through a standard 5.5 x 2.5 mm DC connector. Supply voltage range has to be from 6 to 18 V. Below 6 V the current through the LEDs starts decreasing. For the supply voltage above 18 V, the board temperature can be the limitation. The Function and Diagnostic connectors has to be connected. In case of High−End version, also Key connector has to be interconnected with EVB board. Onboard activation switches (or button for STOP) activate appropriate function. The green indication LED shows the status of the switches. The red LEDs indicates the eventual faults reported from EVB boards.

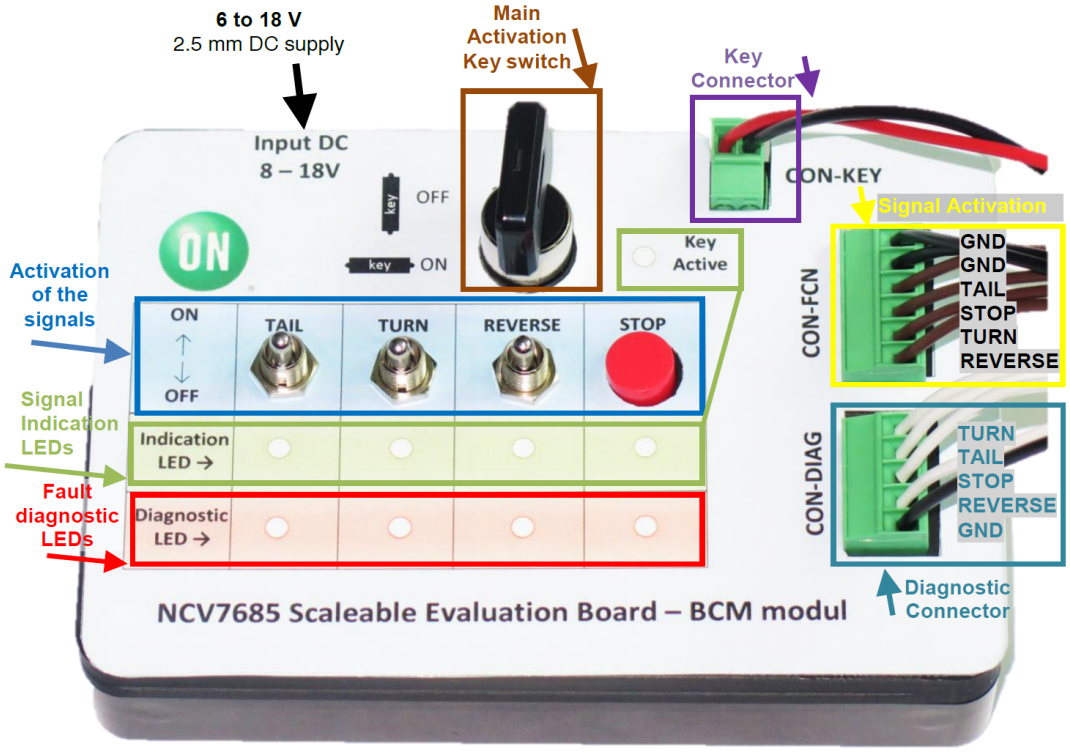

Figure 2. Body Control Module NCV7685BCMR1GEVB Board Picture

Modules Control Strategy

Three different variants of the EVB boards needs to be controlled via universal BCM module. Position of the LEDs is the same for all three versions but the overall LED performance is different, some of the LEDs are controlled individually and some of the LEDs, especially for LOW−End variant are controlled as one big segment. The overview of the LED controllability is shown in Figure 3.

LOW end:

- Same functionality as bulb tail light
- Minimized electronic

MID end:

- Animated turn indicator is added
- Styling upgrade (more fancy optic requiring more LEDs)

HIGH end:

- Full animation control
- More LEDs with individual LED control (Pixelization)

Controlability per LED segment

Platform\Fcn	TAIL ↓		STOP ↓		REVERSE ↓		TURN ↓	
LOW →	OFF	ON	OFF	ON	OFF	ON	OFF	ON
MID →	OFF	ON	OFF	ON	OFF	ON	OFF / PWM	ON / PWM
HIGH →	OFF / PWM	ON / PWM	OFF / PWM	ON / PWM	OFF / PWM	ON / PWM	OFF / PWM	ON / PWM

legend:

ON	All LEDs in one segment are turned ON
OFF	All LEDs in one segment are turned OFF
ON	Pixelization is taken into account, some of the LEDs are ON
OFF	Pixelization is taken into account, some of the LEDs are OFF
PWM	Advanced PWM animation for every pixel

Figure 3. Overall LED Styling Effects for Reference Designs

NCV7685LOWR1GEVB

Low−end variant comes with four NCV7685 devices. Each device control the individual function (TAIL, TURN, REVERSE, STOP). The two LEDs in series are used for TAIL and STOP lights. One LED per each channel is used for TURN signal. The REVERSE contain only four white LEDs, but each LED package contain three silicon LED dies with independent terminals. To drive one white LED, three outputs of 25 mA are needed.

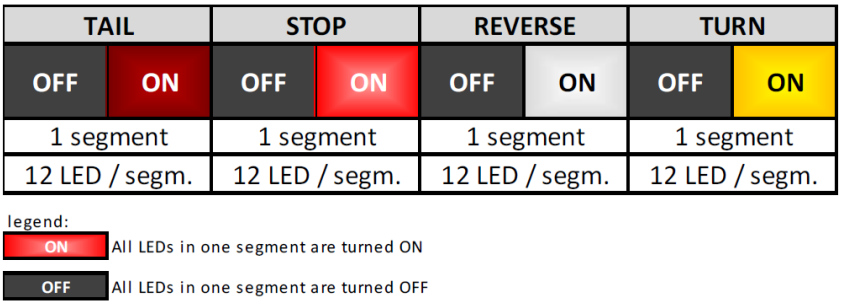

Figure 4. Function Styling Overview for LOW−End Variant

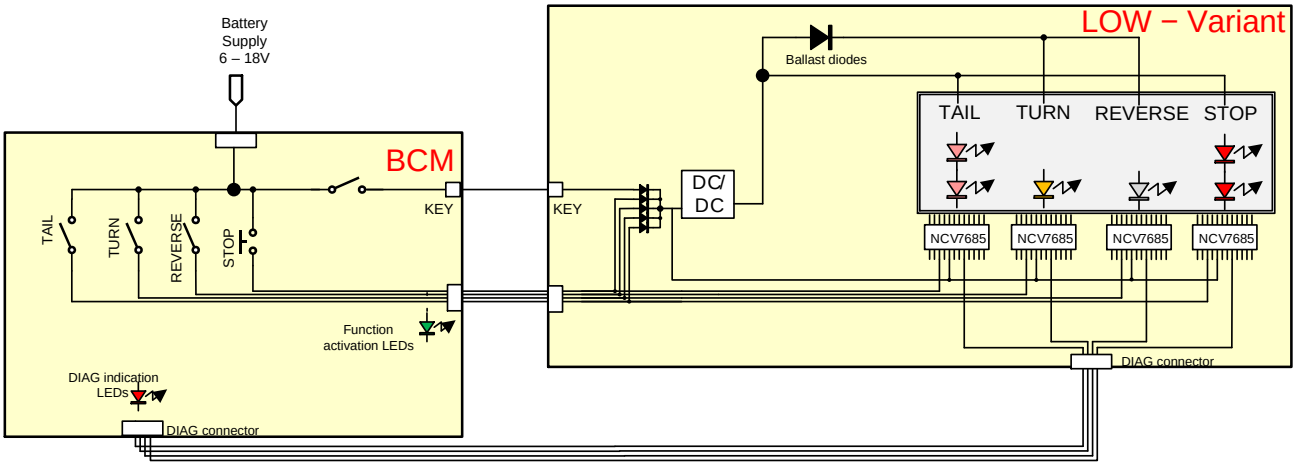

Figure 5. Simplified Block Diagram of Interfacing the NCV7685BCMR1GEVB + NCV7685LOWR1GEVB

NCV7685MIDR1GEVB

Mid−end variant is similar to Low−end variant. The RSL10 microcontroller is added to control the TURN LED driver. When the TURN signal is activated, the animated turn indicator effect is played. The other signals can be activated independently with basic functions. The turn indicator has 12 segments = 1LED / pixel.

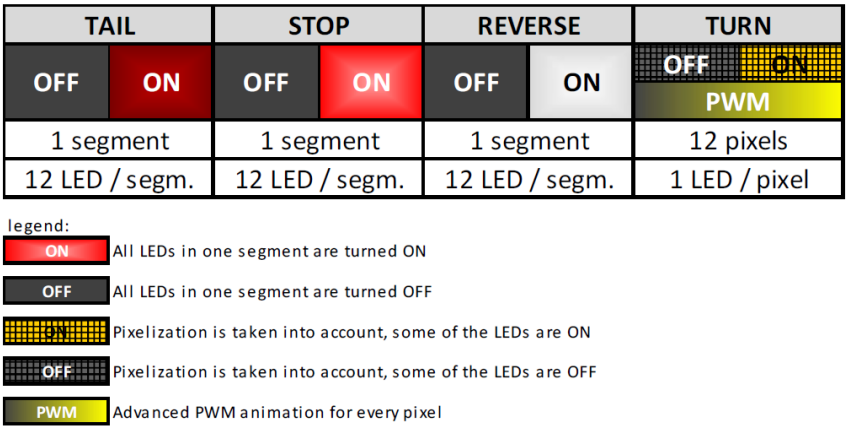

Figure 6. Function Styling Overview for MID−End Variant

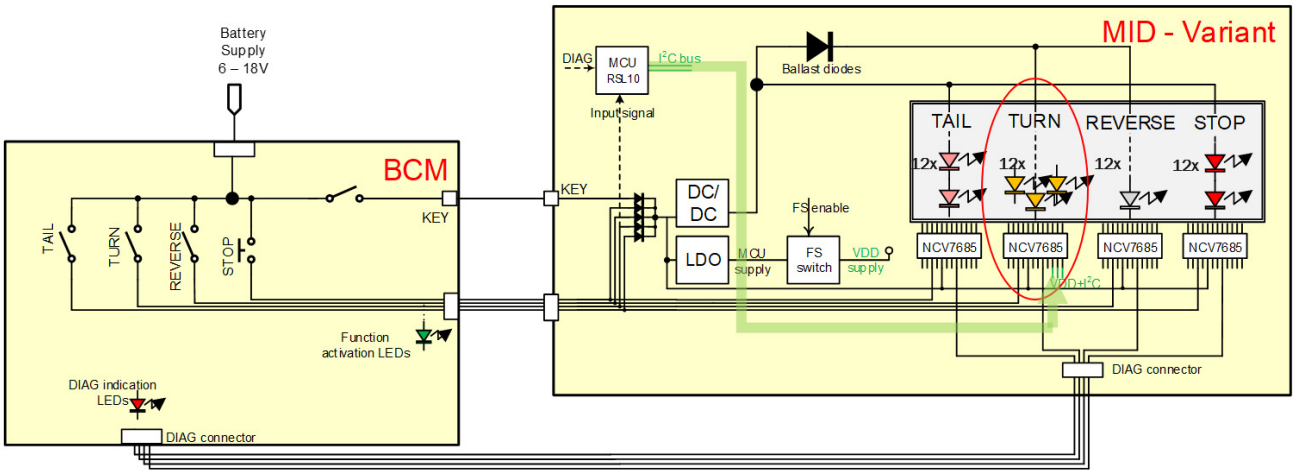

Figure 7. Simplified Block Diagram of Interfacing the NCV7685BCMR1GEVB + NCV7685MIDR1GEVB

NCV7685HIGHGEVB

High−end variant contain six NCV7685 devices, The LEDs are controlled individually. The single LED is connected to individual LED driver output. (1 LED per pixel). In normal mode, the MCU is actively reading the input pins from the main connector (from the BCM) and activate the functions in the I2C mode.

If MCU is reset or is not responding or if the I2C bus is broken, all devices will switch to standalone mode operation from the I2C mode. In Fail safe mode the board performance acts as the Low−end variant. Due to FS switch which disable the VDD supply and the IC goes automatically into Standalone Mode.

TAIL	STOP	REVERSE	TURN
OFF ON	OFF ON	OFF ON	OFF ON
PWM		PWM	PWM
48 pixels		4 pixels	12 pixels
1 LED / pixel		3 LED / pixel	1 LED / pixel

legend:

ON	All LEDs in one segment are turned ON
OFF	All LEDs in one segment are turned OFF
ON	Pixelization is taken into account, some of the LEDs are ON
OFF	Pixelization is taken into account, some of the LEDs are OFF
PWM	Advanced PWM animation for every pixel

Figure 8. Function Styling Overview for High−End Variant

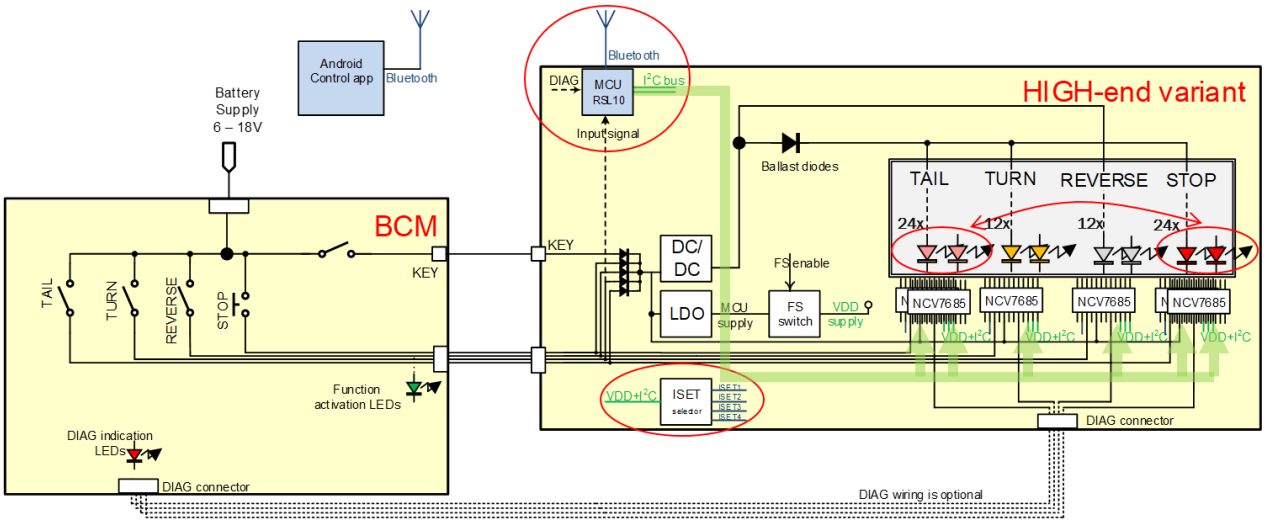

Figure 9. Simplified Block Diagram of Interfacing the NCV7685BCMR1GEVB + NCV7685HIGH1GEVB

GET STARTED

NCV7685LOWR1GEVB

For normal operation the OL1 jumper has to be connected. The CON−FCN 6−wire cable has to be interconnected in between Main board and the BCM module. Also the CON_DIAG 5−wire cable between BCM and main module is used for the diagnostic. The CON−Key cable is not needed, because the Low−End variant does not have capability of the welcome animation.

As soon as the cables are connected, the 6 – 18V DC power supply can be enabled to the BCM module using 2.5 mm jack cord. To activate the function, the appropriate switch can be activate to the ON position. The STOP function has button to emulate the push pedal.

With every activated switch (or button) the VString, VS and VCC green indication LED should indicate the correct function.

The Open Load condition can be emulate by opening the OL1 jumper while the STOP button is pressed. In this case, the red diagnostic LED indicate the fault.

NCV7685MIDR1GEVB

For normal operation the OL1 jumper has to be connected. The CON−FCN 6−wire cable has to be interconnected in between Main board and the BCM module. Also the CON_DIAG 5−wire cable between BCM and main module is used for the diagnostic. The CON−Key cable is optional, it allow to have better styling effect for the turn indicator.

As soon as the cables are connected, the 6 – 18V DC power supply has to be connected to the BCM module via 2.5 mm jack cord. To activate the any function, the appropriate switch can be activate to the ON position. The STOP function has button to emulate the push pedal.

With every activated switch (or button) the VString, VS, VCC and VDD green indication LED should indicate the correct function.

The Open Load condition can be emulate by opening the OL1 jumper while the STOP button is switched. In this case, the red diagnostic LED indicate the fault.

When the TURN indicator is activated, the animation sequence is played. If the other signal (or IGNITION key switch) is activated, then even with short activation of the turn indicator, the three more sequences are played as for the real car.

NCV7685HIGH1GEVB

The OL1 jumper can be connected for normal operation. All cables CON−KEY, CON−FNC, CON_DIAG has to be connected between BCM and EVB board.

As soon as the cables are connected, the 6 – 18V DC power supply has to be connected to the BCM module via 2.5 mm jack cord. It is advised to activate the Key Switch for the first instance. The default welcome animation will be played. Then the individual function can be activated by appropriate switches / button. For the High−end variant, the TAIL / STOP function is shared across every amber LED.

The Fail Safe mode can be emulated by pushing the SW reset button. MCU will be reset and the LED functions will work in basic BULB mode until the error disappear.

The styling for the welcome animation can be changed using Bluetooth interface. To enter into service mode, the only TAIL switch has to be activated while key switch is in OFF position. Then the EVB can be discovered by the Android Bluetooth application RSL10 Demo. The correct Bluetooth name is NCV7685_HIGH_END. After connection, on the next page the one of the animation can be selected from the list. Animation are distinguished by the numbers.

Each animation can adjust maximum brightness in range of 1 – 127. Also two parameters A and B can fine−tune the animation. Parameter A stands for speed and parameter B is used as wide or spread.

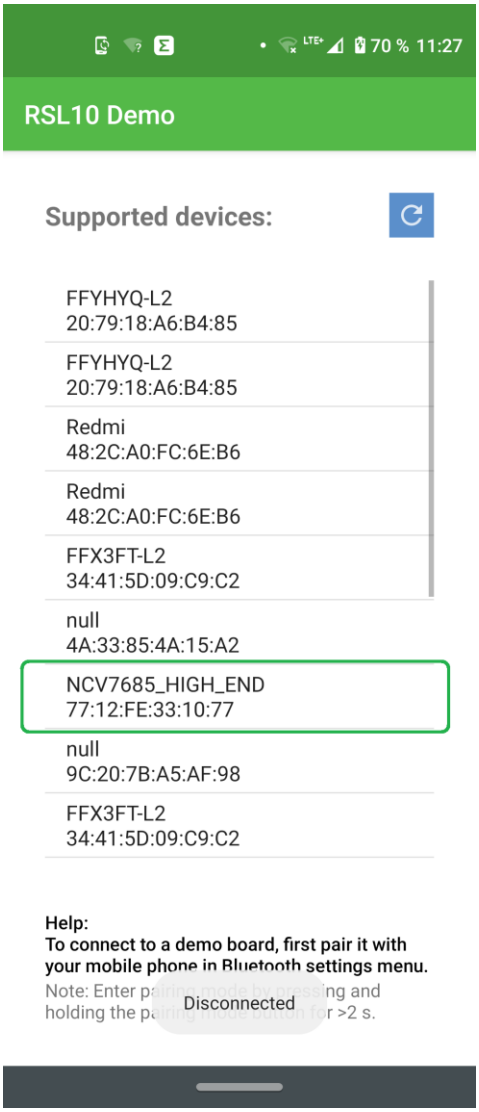

Figure 10. Selection of the Bluetooth Device

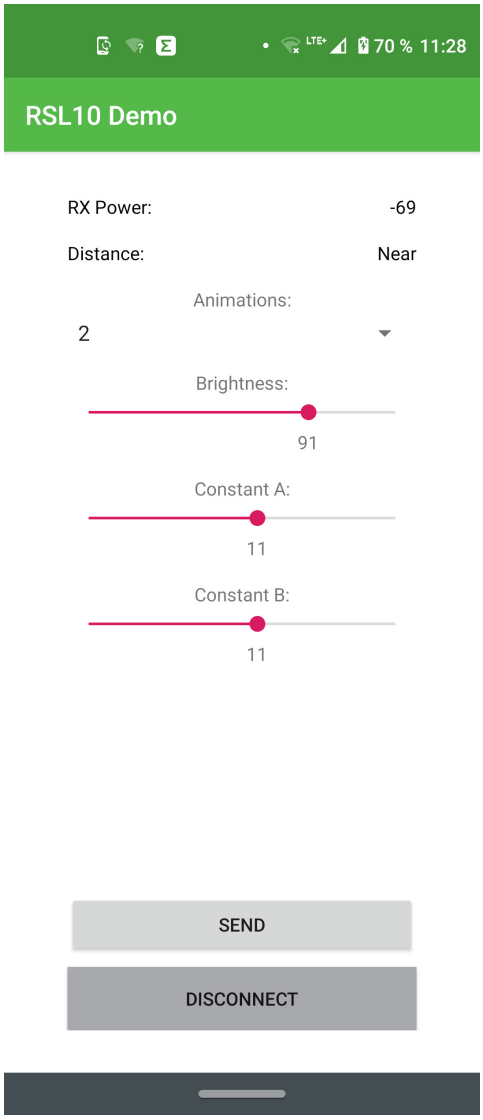

Figure 11. Animation and Parameter Selection for Welcome Animation

SCHEMATICS

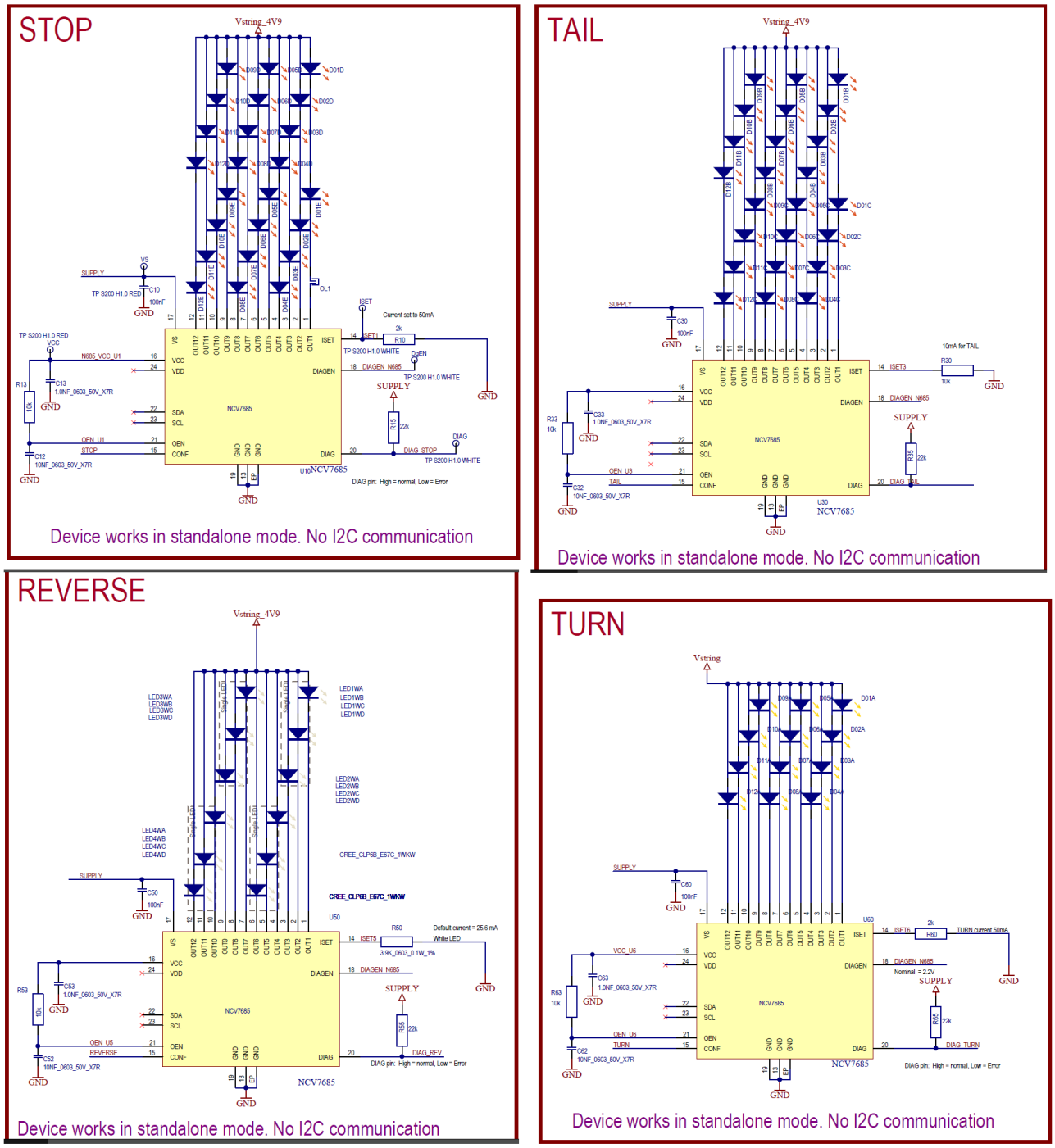

Figure 12. Schematic of the NCV7685LOWR1GEVB Variant Part A

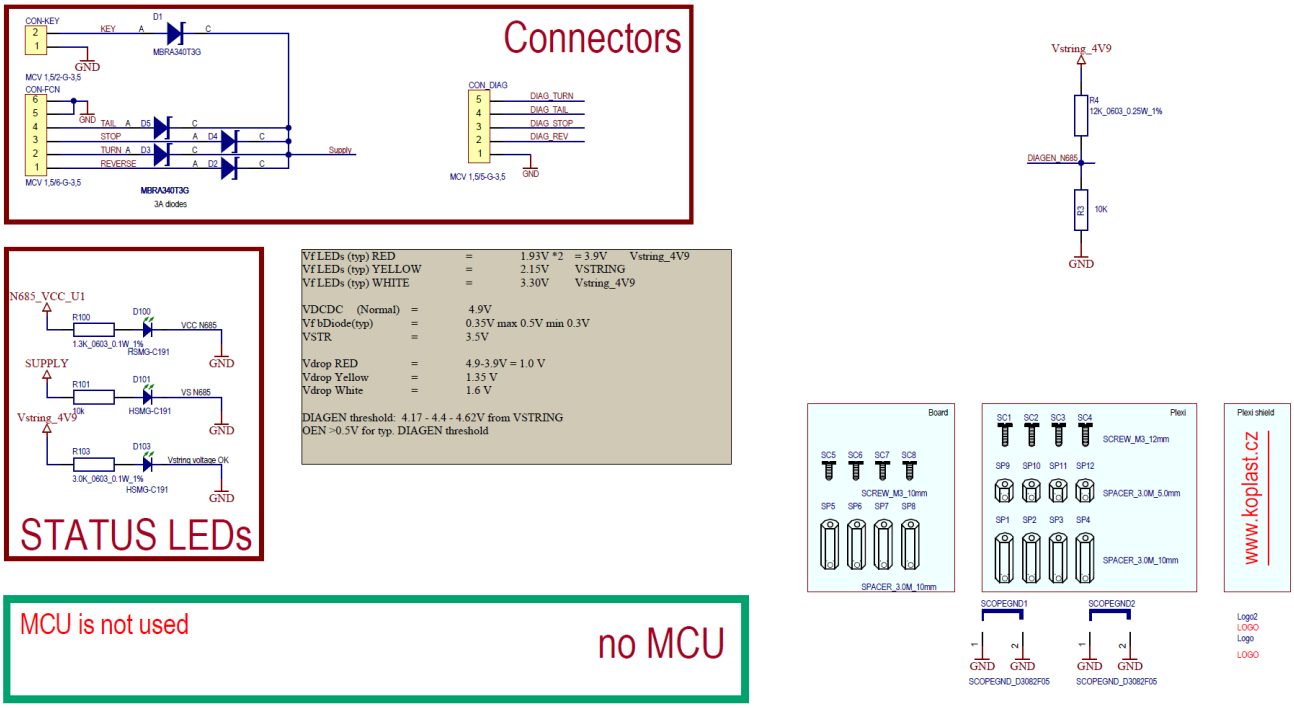

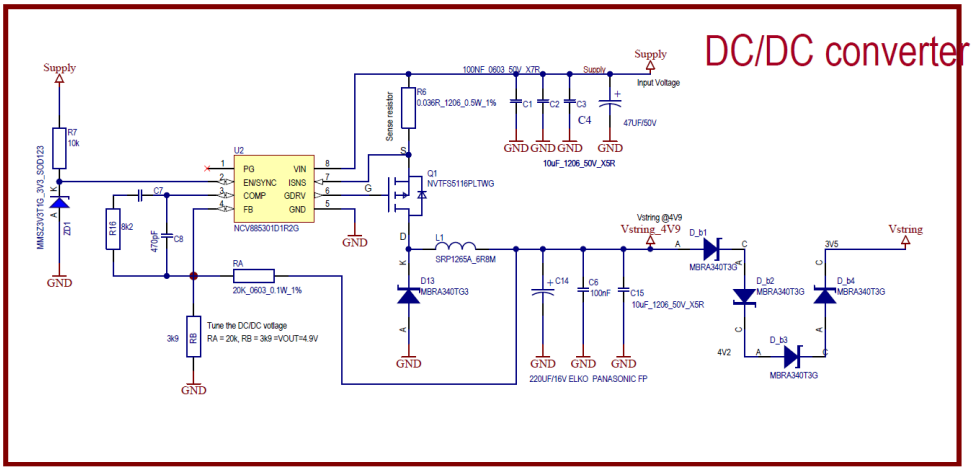

Figure 13. Schematic of the NCV7685LOWR1GEVB Part B

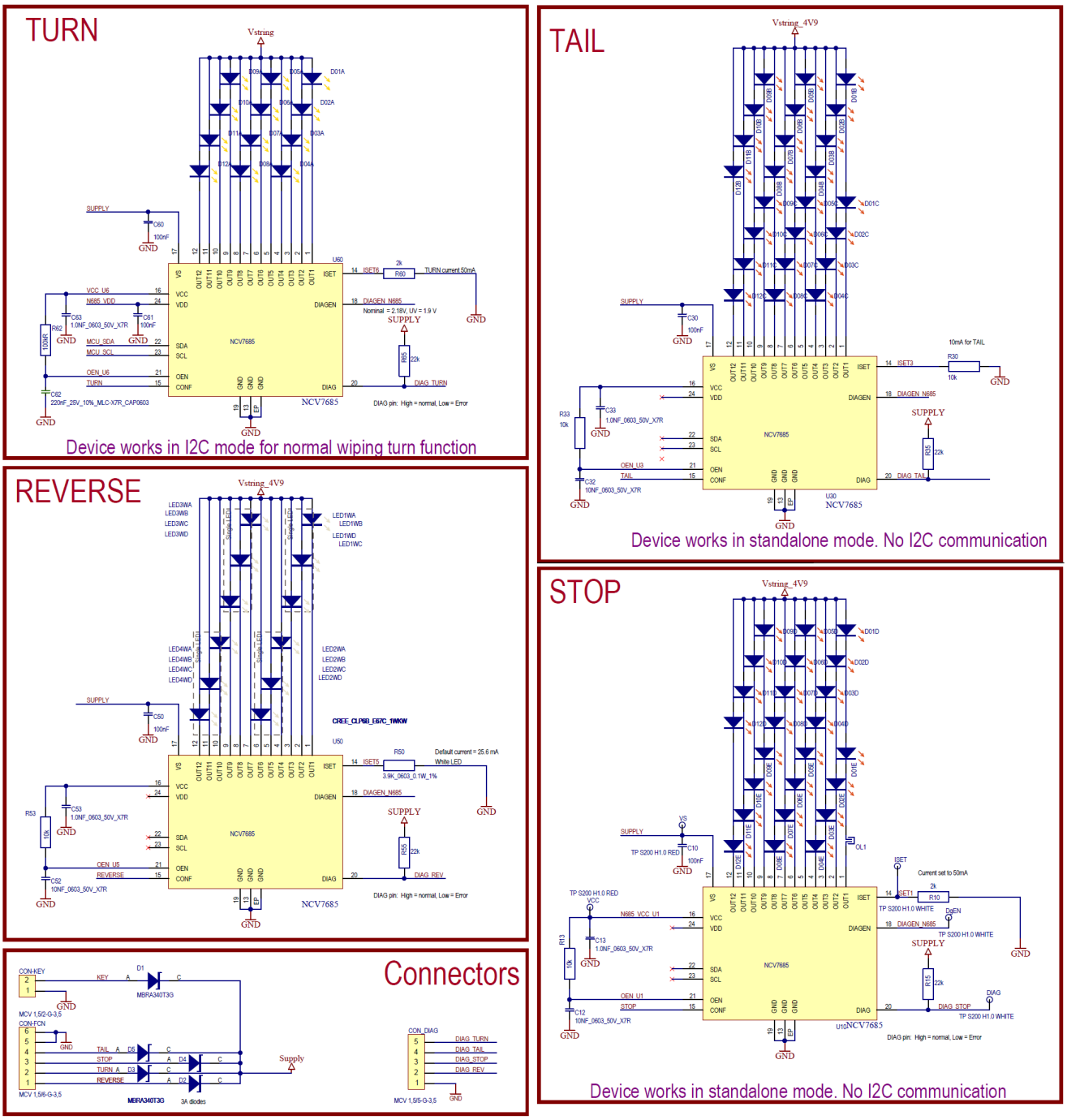

Figure 14. Schematic of the NCV7685MIDR1GEVB Part A

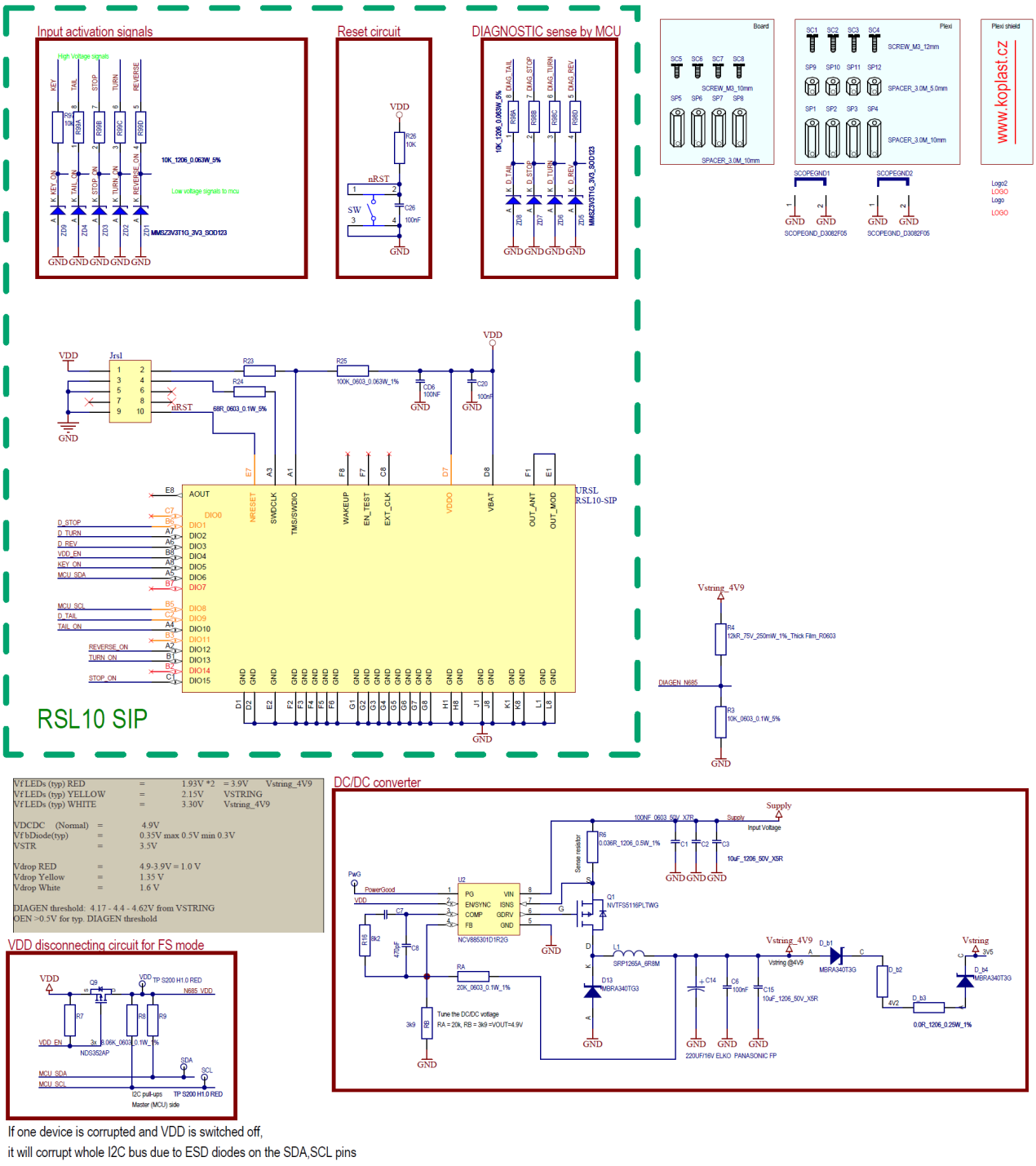

Figure 15. Schematic of the NCV7685MIDR1GEVB Part B

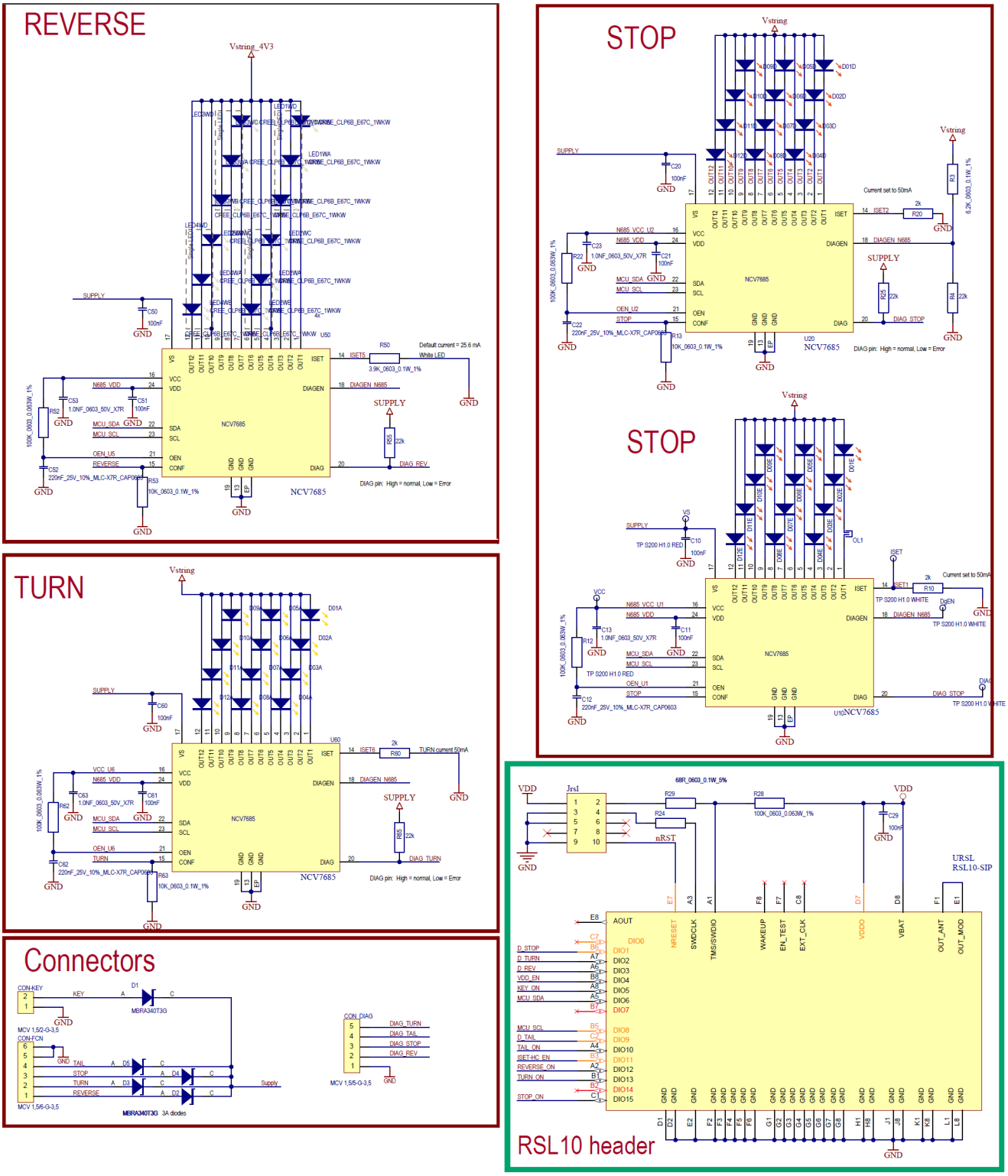

Figure 16. Schematic of the NCV7685HIGH1GEVB Part A

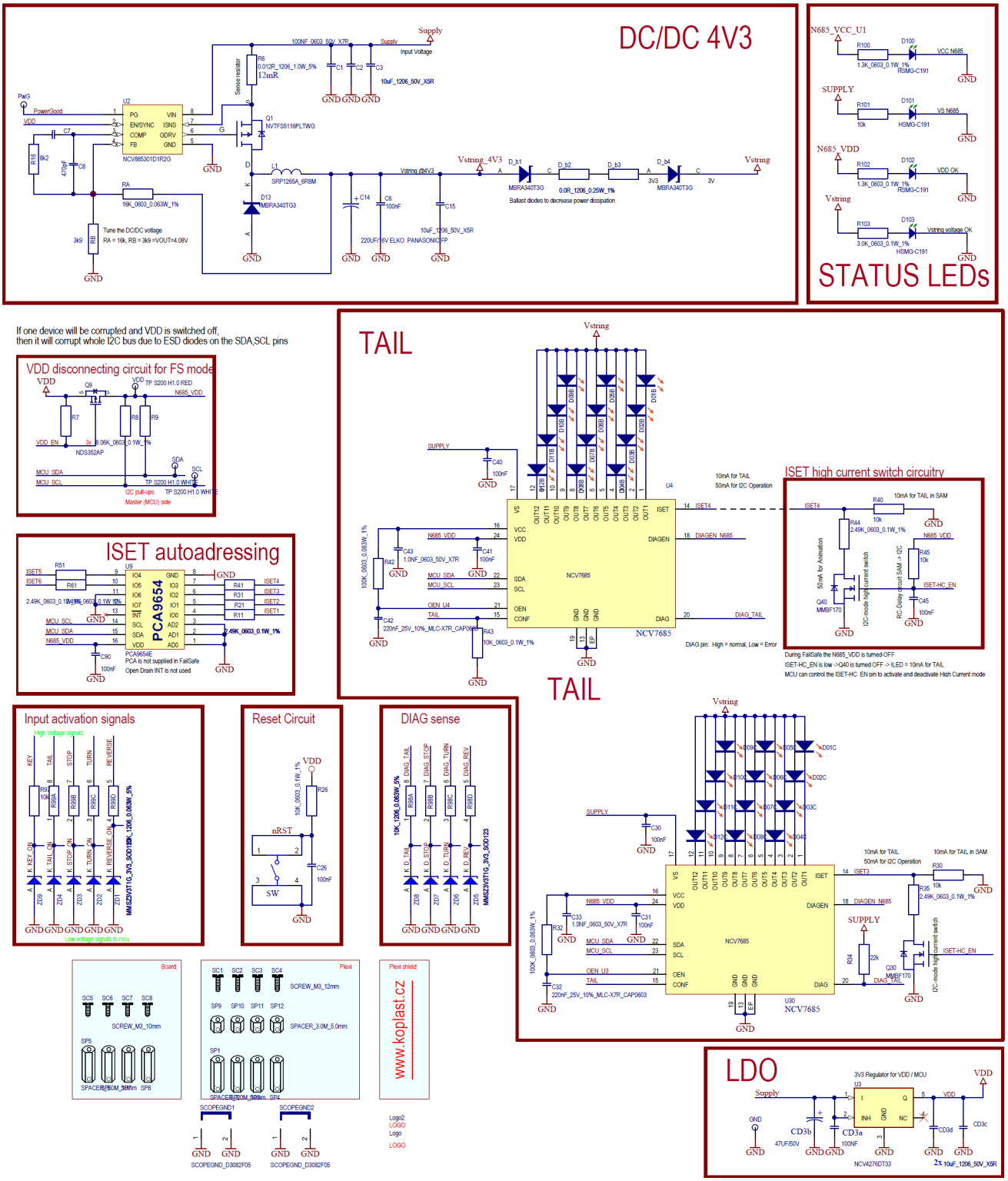

Figure 17. Schematic of the NCV7685HIGH1GEVB Part B

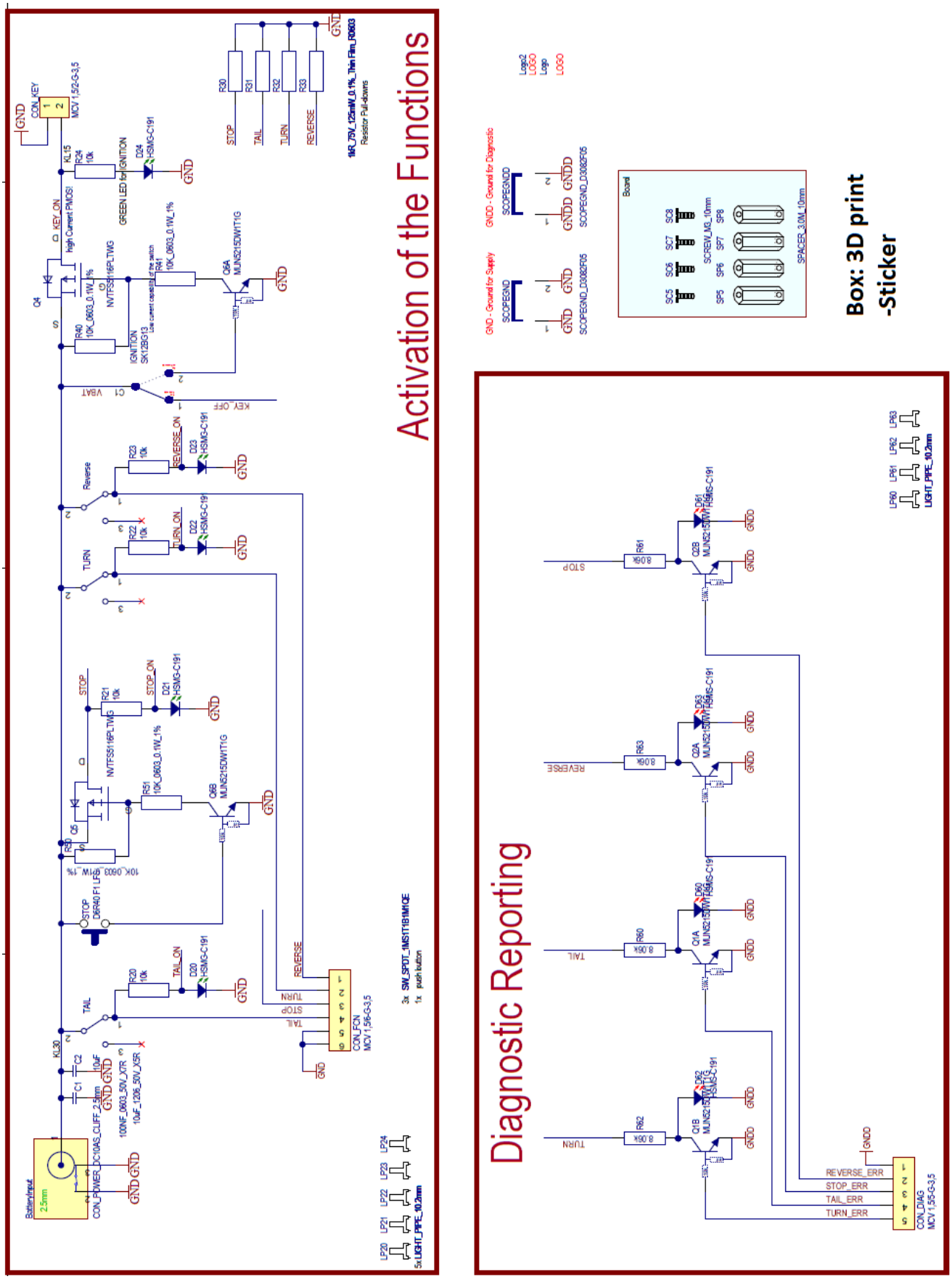

Figure 18. Schematic of the NCV7685BCMR1GEVB Board

PCB Preview

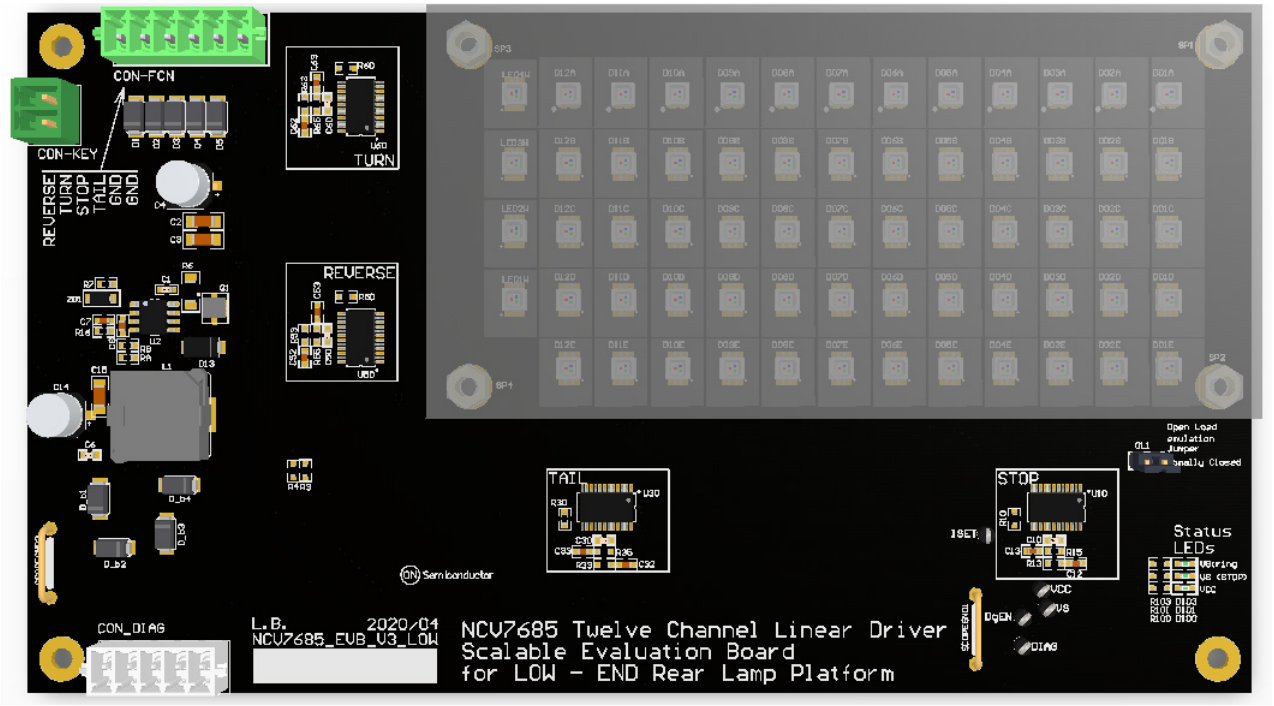

Figure 19. NCV7685LOWR1GEVB EVB PCB Top Side View

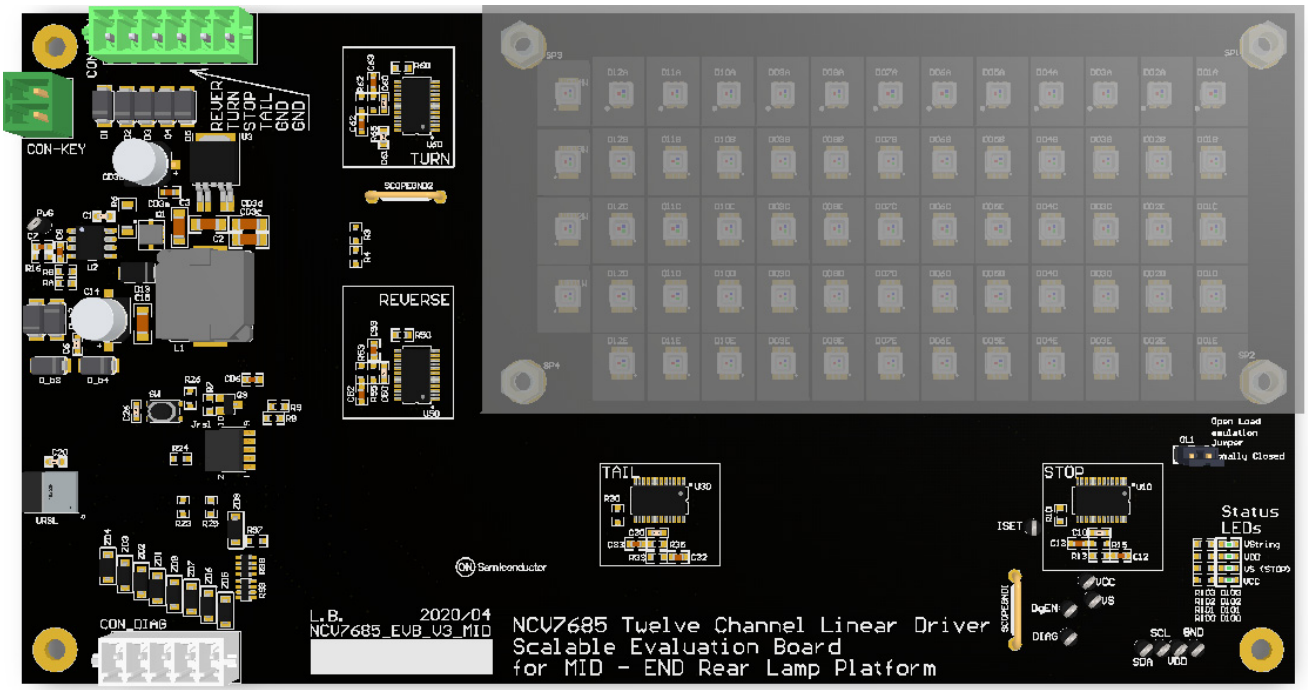

Figure 20. NCV7685MIDR1GEVB EVB PCB Top Side View

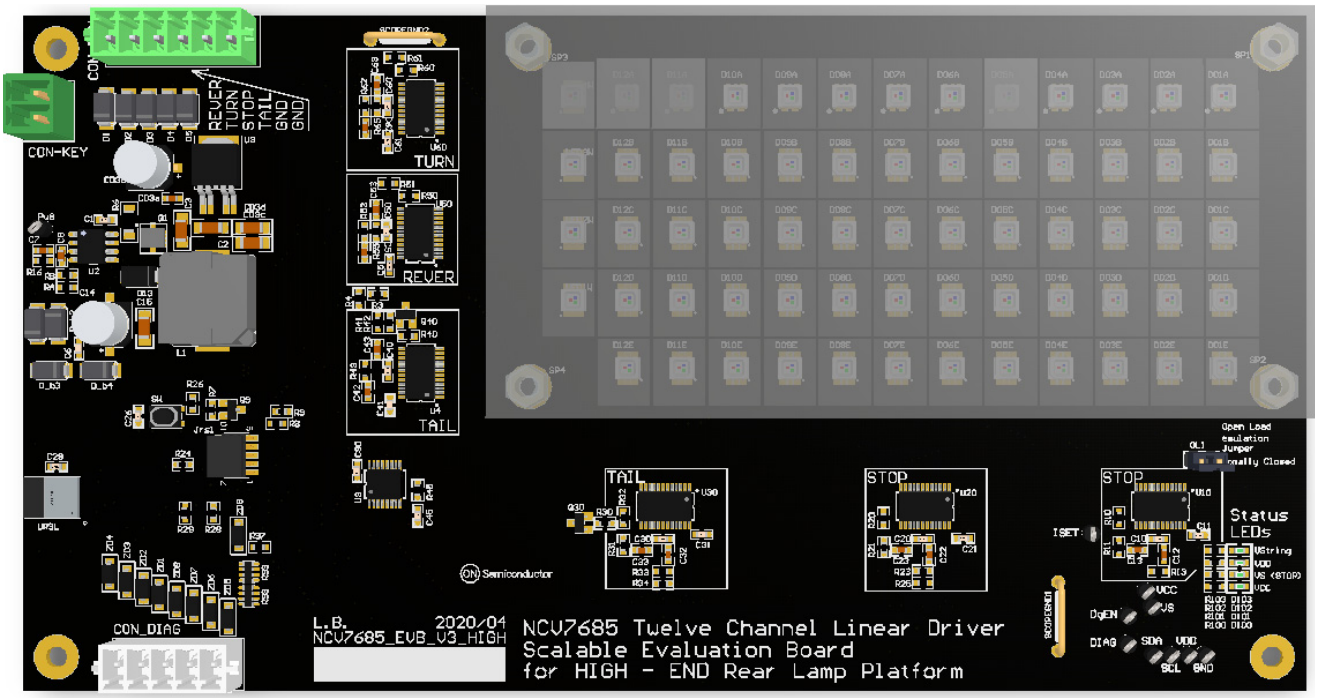

Figure 21. NCV7685HIGH1GEVB EVB PCB Top Side View

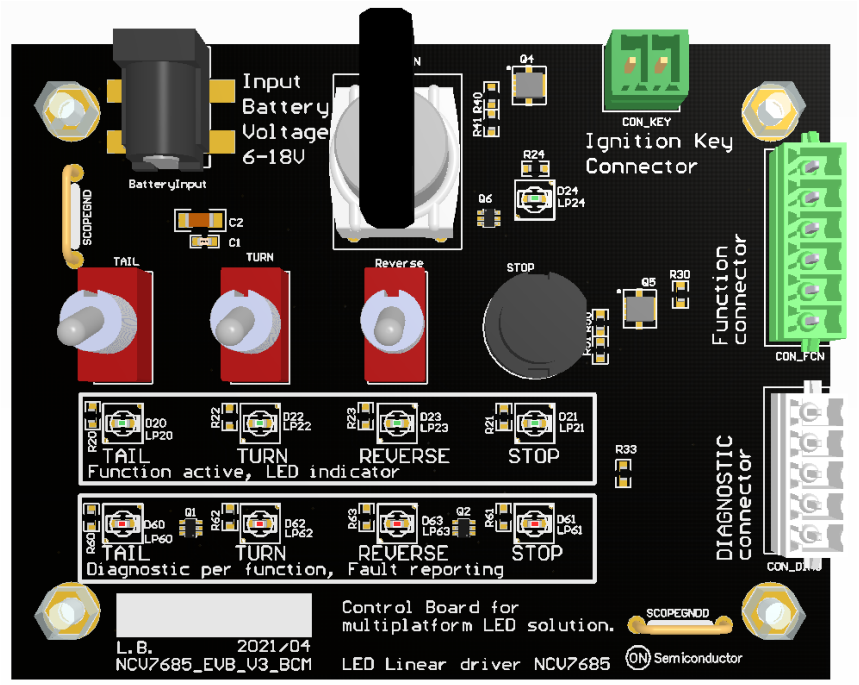

Figure 22. NCV7685BCMR1GEVB EVB PCB Top Side View

REFERENCES

[1] ON Semiconductor, NCV7685 Rev.2, October 2020
[2] ON Semiconductor, NCV8853: Automotive Grade Non−Synchronous Buck Controller Rev.5, October 2016
[3] ON Semiconductor, AND9764/D: NCV7685 I2C programming Guide, May, 2020 – Rev.2

onsemi, onsemi, and other names, marks, and brands are registered and/or common law trademarks of Semiconductor Components Industries, LLC dba "**onsemi**" or its affiliates and/or subsidiaries in the United States and/or other countries. **onsemi** owns the rights to a number of patents, trademarks, copyrights, trade secrets, and other intellectual property. A listing of **onsemi**'s product/patent coverage may be accessed at www.onsemi.com/site/pdf/Patent−Marking.pdf. **onsemi** is an Equal Opportunity/Affirmative Action Employer. This literature is subject to all applicable copyright laws and is not for resale in any manner.

The evaluation board/kit (research and development board/kit) (hereinafter the "board") is not a finished product and is not available for sale to consumers. The board is only intended for research, development, demonstration and evaluation purposes and will only be used in laboratory/development areas by persons with an engineering/technical training and familiar with the risks associated with handling electrical/mechanical components, systems and subsystems. This person assumes full responsibility/liability for proper and safe handling. Any other use, resale or redistribution for any other purpose is strictly prohibited.

THE BOARD IS PROVIDED BY ONSEMI TO YOU "AS IS" AND WITHOUT ANY REPRESENTATIONS OR WARRANTIES WHATSOEVER. WITHOUT LIMITING THE FOREGOING, ONSEMI (AND ITS LICENSORS/SUPPLIERS) HEREBY DISCLAIMS ANY AND ALL REPRESENTATIONS AND WARRANTIES IN RELATION TO THE BOARD, ANY MODIFICATIONS, OR THIS AGREEMENT, WHETHER EXPRESS, IMPLIED, STATUTORY OR OTHERWISE, INCLUDING WITHOUT LIMITATION ANY AND ALL REPRESENTATIONS AND WARRANTIES OF MERCHANTABILITY, FITNESS FOR A PARTICULAR PURPOSE, TITLE, NON−INFRINGEMENT, AND THOSE ARISING FROM A COURSE OF DEALING, TRADE USAGE, TRADE CUSTOM OR TRADE PRACTICE.

onsemi reserves the right to make changes without further notice to any board.

You are responsible for determining whether the board will be suitable for your intended use or application or will achieve your intended results. Prior to using or distributing any systems that have been evaluated, designed or tested using the board, you agree to test and validate your design to confirm the functionality for your application. Any technical, applications or design information or advice, quality characterization, reliability data or other services provided by **onsemi** shall not constitute any representation or warranty by **onsemi**, and no additional obligations or liabilities shall arise from **onsemi** having provided such information or services.

onsemi products including the boards are not designed, intended, or authorized for use in life support systems, or any FDA Class 3 medical devices or medical devices with a similar or equivalent classification in a foreign jurisdiction, or any devices intended for implantation in the human body. You agree to indemnify, defend and hold harmless **onsemi**, its directors, officers, employees, representatives, agents, subsidiaries, affiliates, distributors, and assigns, against any and all liabilities, losses, costs, damages, judgments, and expenses, arising out of any claim, demand, investigation, lawsuit, regulatory action or cause of action arising out of or associated with any unauthorized use, even if such claim alleges that **onsemi** was negligent regarding the design or manufacture of any products and/or the board.

This evaluation board/kit does not fall within the scope of the European Union directives regarding electromagnetic compatibility, restricted substances (RoHS), recycling (WEEE), FCC, CE or UL, and may not meet the technical requirements of these or other related directives.

FCC WARNING − This evaluation board/kit is intended for use for engineering development, demonstration, or evaluation purposes only and is not considered by **onsemi** to be a finished end product fit for general consumer use. It may generate, use, or radiate radio frequency energy and has not been tested for compliance with the limits of computing devices pursuant to part 15 of FCC rules, which are designed to provide reasonable protection against radio frequency interference. Operation of this equipment may cause interference with radio communications, in which case the user shall be responsible, at its expense, to take whatever measures may be required to correct this interference.

onsemi does not convey any license under its patent rights nor the rights of others.

LIMITATIONS OF LIABILITY: **onsemi** shall not be liable for any special, consequential, incidental, indirect or punitive damages, including, but not limited to the costs of requalification, delay, loss of profits or goodwill, arising out of or in connection with the board, even if **onsemi** is advised of the possibility of such damages. In no event shall **onsemi**'s aggregate liability from any obligation arising out of or in connection with the board, under any theory of liability, exceed the purchase price paid for the board, if any.

The board is provided to you subject to the license and other terms per **onsemi**'s standard terms and conditions of sale. For more information and documentation, please visit www.onsemi.com.

ADDITIONAL INFORMATION

TECHNICAL PUBLICATIONS:
Technical Library: www.onsemi.com/design/resources/technical−documentation
onsemi Website: www.onsemi.com

ONLINE SUPPORT: www.onsemi.com/support
For additional information, please contact your local Sales Representative at www.onsemi.com/support/sales