Dual-4 A, High-Speed, Low-Side Gate Drivers

FAN3213, FAN3214

SOIC8
CASE 751EB

Description

The FAN3213 and FAN3214 dual 4 A gate drivers are designed to drive N-channel enhancement-mode MOSFETs in low-side switching applications by providing high peak current pulses during the short switching intervals. They are both available with TTL input thresholds. Internal circuitry provides an under-voltage lockout function by holding the output LOW until the supply voltage is within the operating range. In addition, the drivers feature matched internal propagation delays between A and B channels for applications requiring dual gate drives with critical timing, such as synchronous rectifiers. This also enables connecting two drivers in parallel to effectively double the current capability driving a single MOSFET.

The FAN3213/14 drivers incorporate MillerDrive™ architecture for the final output stage. This bipolar-MOSFET combination provides high current during the Miller plateau stage of the MOSFET turn-on/turn-off process to minimize switching loss, while providing rail-to-rail voltage swing and reverse current capability.

The FAN3213 offers two inverting drivers and the FAN3214 offers two non-inverting drivers. Both are offered in a standard 8-pin SOIC package.

Features

- Industry-Standard Pin Out
- 4.5 to 18 V Operating Range
- 5 A Peak Sink/Source at V_{DD} = 12 V
- 4.3 A Sink/2.8 A Source at V_{OUT} = 6 V
- TTL Input Thresholds
- Two Versions of Dual Independent Drivers:
  - Dual Inverting (FAN3213)
  - Dual Non-Inverting (FAN3214)
- Internal Resistors Turn Driver Off if No Inputs
- Miller Drive Technology
- 12 ns/9 ns Typical Rise/Fall Times with 2.2 nF Load
- Typical Propagation Delay Under 20 ns Matched within 1 ns to the Other Channel
- Double Current Capability by Paralleling Channels
- Standard SOIC-8 Package
- Rated from –40 °C to +125 °C Ambient
- These are Pb-Free Devices

Applications

- Switch-Mode Power Supplies
- High-Efficiency MOSFET Switching
- Synchronous Rectifier Circuits
- DC-to-DC Converters
- Motor Control

MARKING DIAGRAM

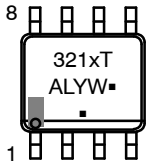

A	= Assembly Location
L	= Wafer Lot
YW	= Assembly Start Week
▪	= Pb-Free Package

(Note: Microdot may be in either location)

ORDERING INFORMATION

See detailed ordering and shipping information on page 15 of this data sheet.

NOTE: Some of the devices on this data sheet have been **DISCONTINUED**. Please refer to the table on page 15.

© Semiconductor Components Industries, LLC, 2008

PIN CONFIGURATIONS

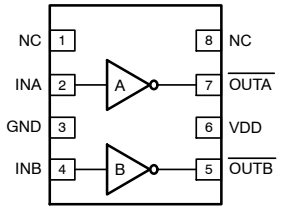

FAN3213

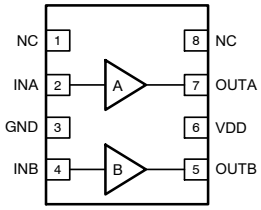

FAN3214

Figure 1. Pin Configurations

PACKAGE OUTLINES

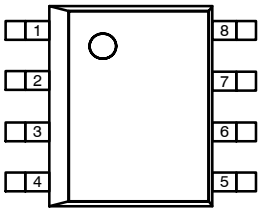

Figure 2. SOIC-8 (Top View)

THERMAL CHARACTERISTICS (Note 1)

Package	Θ_{JL} (Note 2)	Θ_{JT} (Note 3)	Θ_{JA} (Note 4)	Ψ_{JB} (Note 5)	Ψ_{JT} (Note 6)	Unit
8-Pin Small Outline Integrated Circuit (SOIC)	38	29	87	41	2.3	°C/W

1. Estimates derived from thermal simulation; actual values depend on the application.
2. Theta_JL (Θ_{JL}): Thermal resistance between the semiconductor junction and the bottom surface of all the leads (including any thermal pad) that are typically soldered to a PCB.
3. Theta_JT (Θ_{JT}): Thermal resistance between the semiconductor junction and the top surface of the package, assuming it is held at a uniform temperature by a top-side heatsink.
4. Theta_JA (Θ_{JA}): Thermal resistance between junction and ambient, dependent on the PCB design, heat sinking, and airflow. The value given is for natural convection with no heatsink using a 2S2P board, as specified in JEDEC standards JESD51-2, JESD51-5, and JESD51-7, as appropriate.
5. Psi_JB (Ψ_{JB}): Thermal characterization parameter providing correlation between semiconductor junction temperature and an application circuit board reference point for the thermal environment defined in Note 4. For the MLP-8 package, the board reference is defined as the PCB copper connected to the thermal pad and protruding from either end of the package. For the SOIC-8 package, the board reference is defined as the PCB copper adjacent to pin 6.
6. Psi_JT (Ψ_{JT}): Thermal characterization parameter providing correlation between the semiconductor junction temperature and the center of the top of the package for the thermal environment defined in Note 4.

Share Feedback
Your Opinion Matters

PIN DEFINITIONS

Pin	Name	Description
1	NC	*No Connect.* This pin can be grounded or left floating.
2	INA	*Input to Channel A.*
3	GND	*Ground.* Common ground reference for input and output circuits.
4	INB	*Input to Channel B.*
5	$\overline{\text{OUTB}}$	*Gate Drive Output B* (inverted from the input): Held LOW unless required input is present and V_{DD} is above UVLO threshold.
5	OUTB	*Gate Drive Output B:* Held LOW unless required input(s) are present and V_{DD} is above UVLO threshold.
6	VDD	*Supply Voltage.* Provides power to the IC.
7	$\overline{\text{OUTA}}$	*Gate Drive Output A* (inverted from the input): Held LOW unless required input is present and V_{DD} is above UVLO threshold.
7	OUTA	*Gate Drive Output A:* Held LOW unless required input(s) are present and V_{DD} is above UVLO threshold.
8	NC	*No Connect*. This pin can be grounded or left floating.

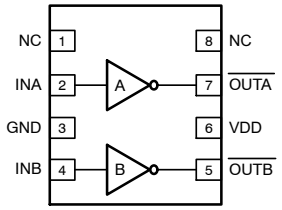

FAN3213

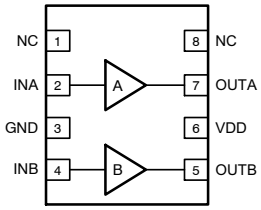

FAN3214

Figure 3. Pin Configurations (Repeated)

OUTPUT LOGIC

FAN3213 (x = A or B)	
INx	**$\overline{\text{OUTx}}$**
0	1
1 (Note 7)	0

FAN3214 (x = A or B)	
INx	**OUTx**
0 (Note 7)	0
1	1

7. Default input signal if no external connection is made.

Share Feedback
Your Opinion Matters

BLOCK DIAGRAMS

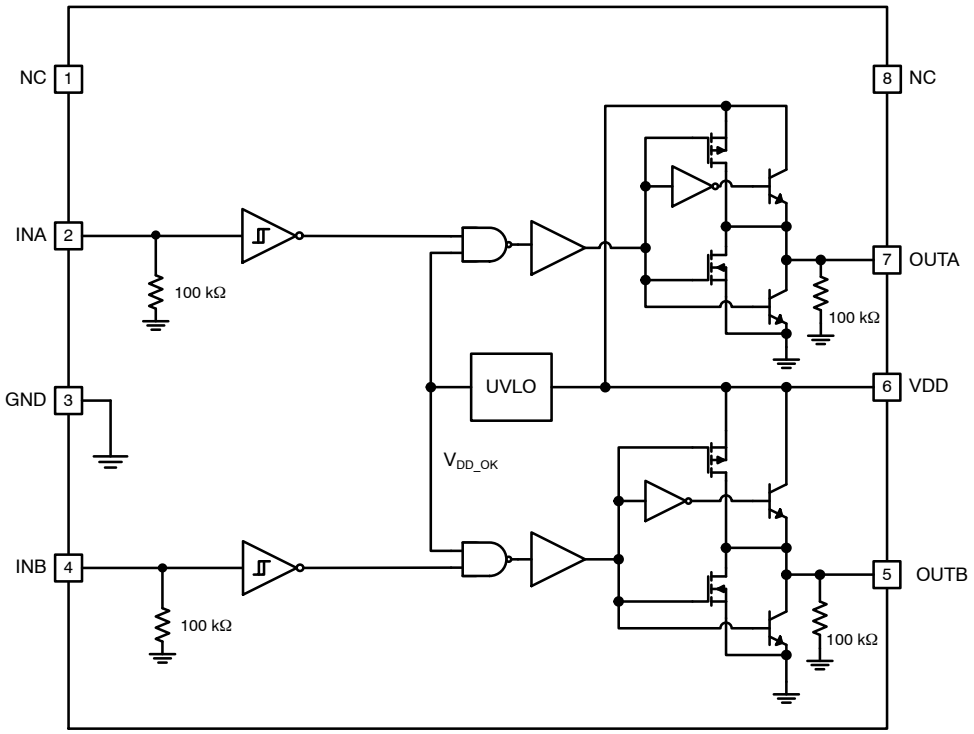

Figure 4. FAN3213 Block Diagram

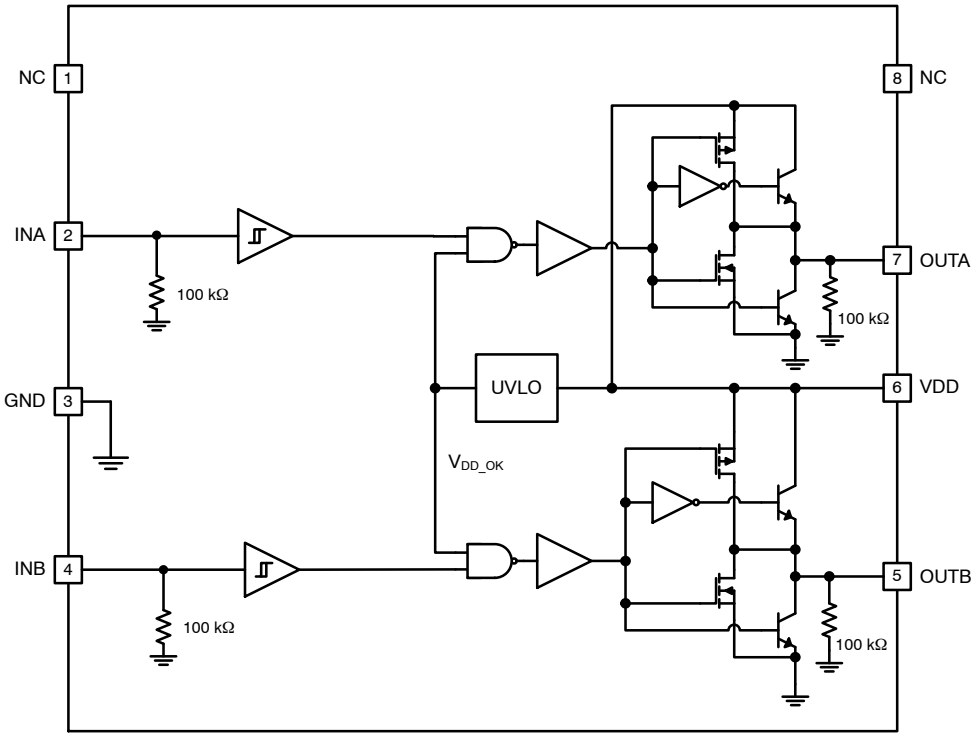

Figure 5. FAN3214 Block Diagram

Share Feedback
Your Opinion Matters

ABSOLUTE MAXIMUM RATINGS

Symbol	Parameter	Min	Max	Unit
V_{DD}	VDD to GND	–0.3	20.0	V
V_{IN}	INA and INB to GND	GND – 0.3	V_{DD} + 0.3	V
V_{OUT}	OUTA and OUTB to GND	GND – 0.3	V_{DD} + 0.3	V
T_L	Lead Soldering Temperature (10 Seconds)	–	+260	°C
T_J	Junction Temperature	–55	+150	°C
T_{STG}	Storage Temperature	–65	+150	°C

Stresses exceeding those listed in the Maximum Ratings table may damage the device. If any of these limits are exceeded, device functionality should not be assumed, damage may occur and reliability may be affected.

RECOMMENDED OPERATING CONDITIONS

Symbol	Parameter	Min	Max	Unit
V_{DD}	Supply Voltage Range	4.5	18.0	V
V_{IN}	Input Voltage INA and INB	0	V_{DD}	V
T_A	Operating Ambient Temperature	–40	+125	°C

Functional operation above the stresses listed in the Recommended Operating Ranges is not implied. Extended exposure to stresses beyond the Recommended Operating Ranges limits may affect device reliability.

ELECTRICAL CHARACTERISTICS (V_{DD} = 12 V and T_J = –40 °C to +125 °C unless otherwise noted. Currents are defined as positive into the device and negative out of the device.)

Symbol	Parameter	Test Condition	Min	Typ	Max	Unit
SUPPLY						
V_{DD}	Operating Range		4.5	–	18.0	V
I_{DD}	Supply Current, Inputs Not Connected		–	0.70	0.95	mA
V_{ON}	Turn-On Voltage	INA = V_{DD}, INB = 0 V	3.5	3.9	4.3	V
V_{OFF}	Turn-Off Voltage	INA = V_{DD}, INB = 0 V	3.3	3.7	4.1	V
INPUTS						
V_{IL_T}	INx Logic Low Threshold		0.8	1.2	–	V
V_{IH_T}	INx Logic High Threshold		–	1.6	2.0	V
I_{IN+}	Non-Inverting Input Current	IN from 0 to V_{DD}	–1.5	–	175	μA
I_{IN-}	Inverting Input Current	IN from 0 to V_{DD}	–175	–	1.5	μA
V_{HYS_T}	TTL Logic Hysteresis Voltage		0.2	0.4	0.8	V
OUTPUTS						
I_{SINK}	OUT Current, Mid-Voltage, Sinking (Note 8)	OUTx at V_{DD} / 2, C_{LOAD} = 0.22 μF, f = 1 kHz	–	4.3	–	A
I_{SOURCE}	OUT Current, Mid-Voltage, Sourcing (Note 8)	OUTx at V_{DD} / 2, C_{LOAD} = 0.22 μF, f = 1 kHz	–	–2.8	–	A
I_{PK_SINK}	OUT Current, Peak, Sinking (Note 8)	C_{LOAD} = 0.22 μF, f = 1 kHz	–	5	–	A
I_{PK_SOURCE}	OUT Current, Peak, Sourcing (Note 8)	C_{LOAD} = 0.22 μF, f = 1 kHz	–	–5	–	A
I_{RVS}	Output Reverse Current Withstand (Note 8)		–	500	–	mA
$T_{DEL.MATCH}$	Propagation Matching Between Channels	INA = INB, OUTA and OUTB at 50% Point	–	2	4	ns
t_{RISE}	Output Rise Time (Note 9)	C_{LOAD} = 2200 pF	–	12	20	ns

Share Feedback
Your Opinion Matters

ELECTRICAL CHARACTERISTICS (V_{DD} = 12 V and T_J = –40 °C to +125 °C unless otherwise noted. Currents are defined as positive into the device and negative out of the device.) (continued)

Symbol	Parameter	Test Condition	Min	Typ	Max	Unit
OUTPUTS						
t_{FALL}	Output Fall Time (Note 9)	C_{LOAD} = 2200 pF	–	9	17	ns
t_{D1}, t_{D2}	Output Propagation Delay, TTL Inputs (Note 9)	0–5 V_{IN}, 1 V/ns Slew Rate	9	17	29	ns

Product parametric performance is indicated in the Electrical Characteristics for the listed test conditions, unless otherwise noted. Product performance may not be indicated by the Electrical Characteristics if operated under different conditions.

8. Not tested in production.
9. *See Timing Diagrams of Figure 6 and Figure 7.*

TIMING DIAGRAMS

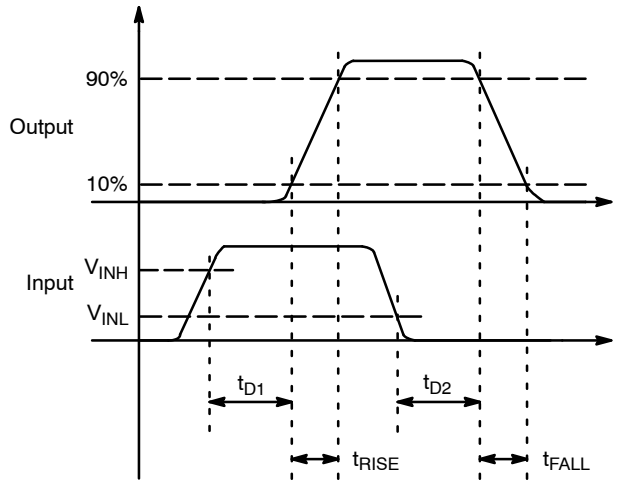

Figure 6. Non–Inverting

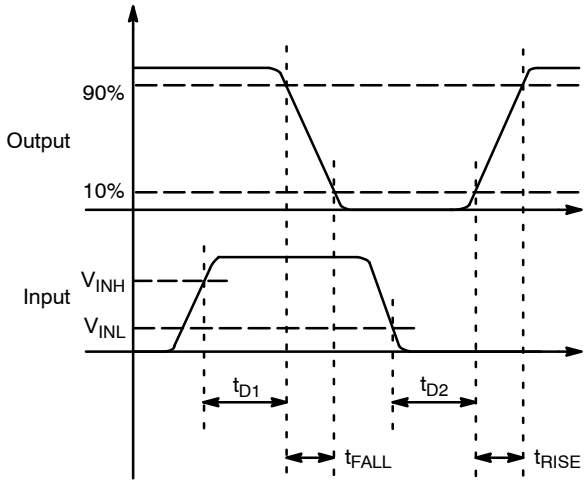

Figure 7. Inverting

Share Feedback
Your Opinion Matters

TYPICAL PERFORMANCE CHARACTERISTICS

(TYPICAL CHARACTERISTICS ARE PROVIDED AT T_A = 25 °C AND V_{DD} = 12 V UNLESS OTHERWISE NOTED)

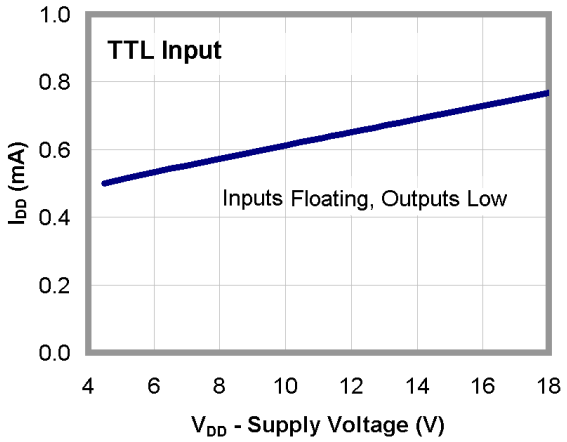

Figure 8. I_{DD} (Static) vs. Supply Voltage (Note 10)

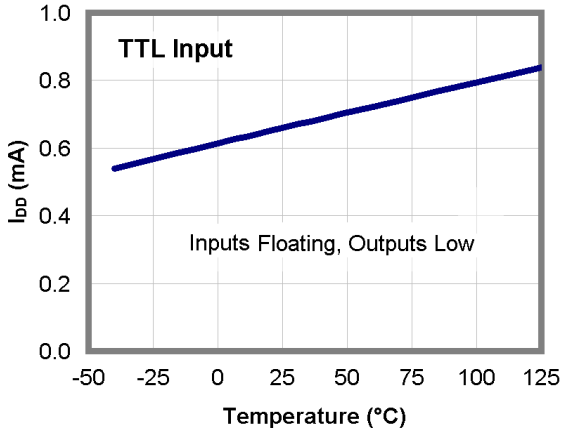

Figure 9. I_{DD} (Static) vs. Supply Voltage (Note 10)

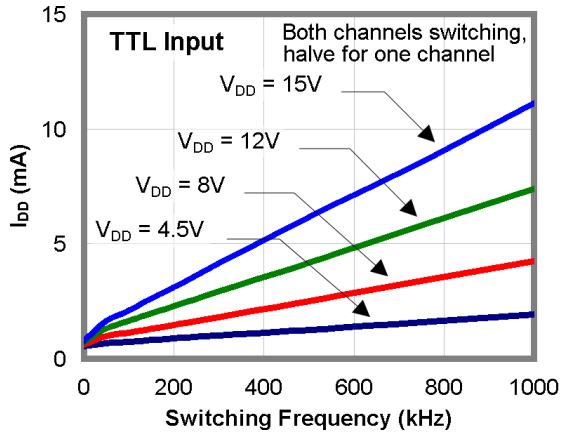

Figure 10. I_{DD} (No−Load) vs. Frequency

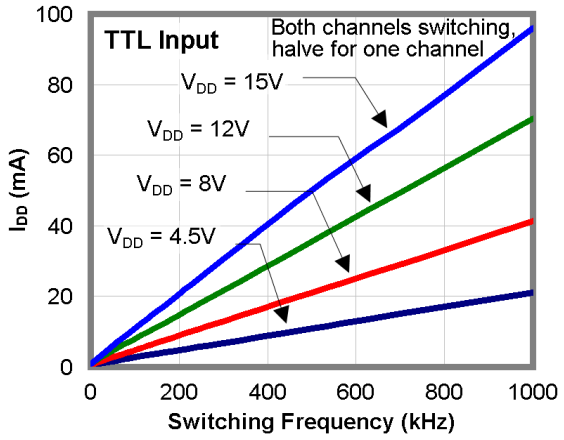

Figure 11. I_{DD} (No−Load) vs. Frequency

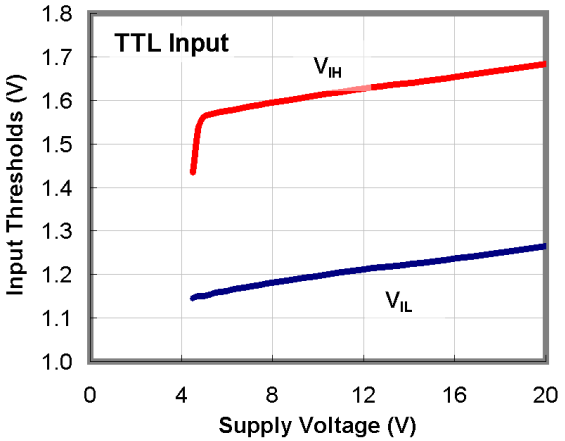

Figure 12. Input Thresholds vs. Supply Voltage

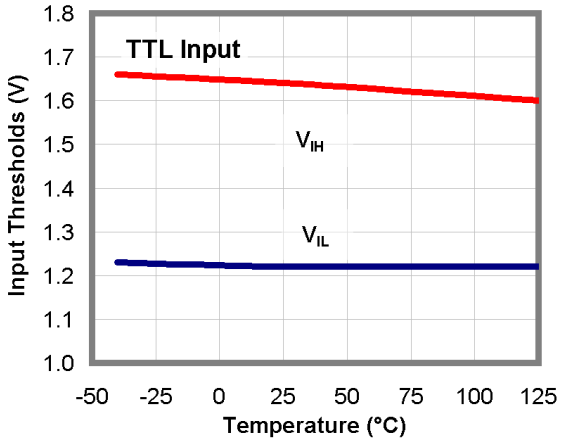

Figure 13. Input Thresholds vs. Supply Voltage

Share Feedback
Your Opinion Matters

TYPICAL PERFORMANCE CHARACTERISTICS

(TYPICAL CHARACTERISTICS ARE PROVIDED AT T_A = 25 °C AND V_{DD} = 12 V UNLESS OTHERWISE NOTED) (CONTINUED)

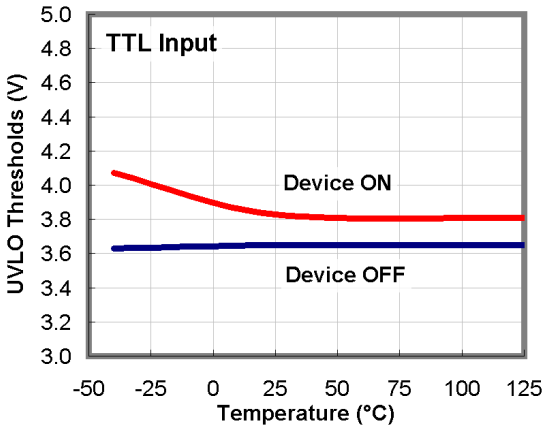

Figure 14. UVLO Thresholds vs. Temperature

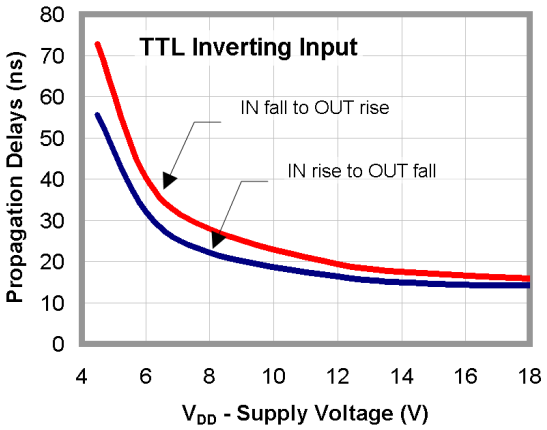

Figure 15. Propagation Delay vs. Supply Voltage

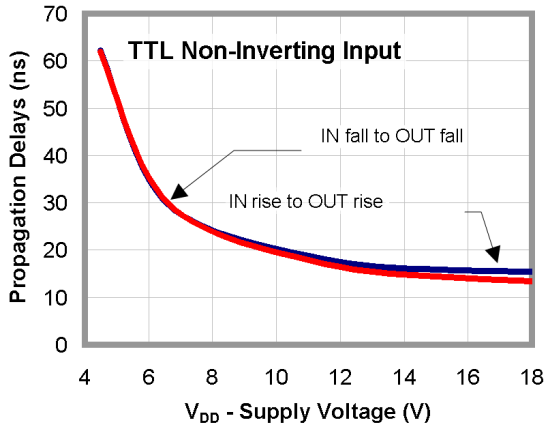

Figure 16. Propagation Delay vs. Supply Voltage

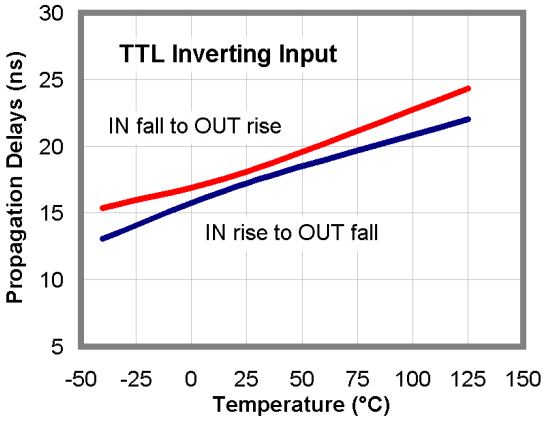

Figure 17. Propagation Delay vs. Supply Voltage

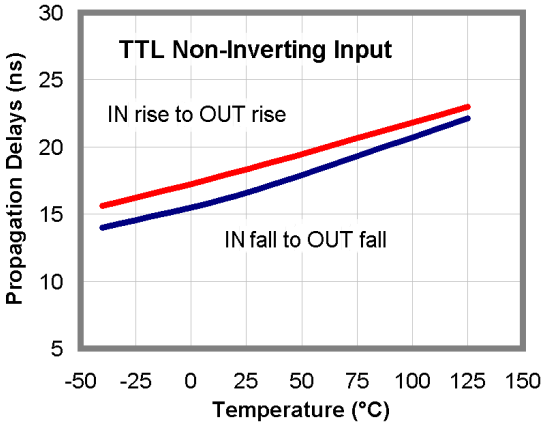

Figure 18. Propagation Delay vs. Supply Voltage

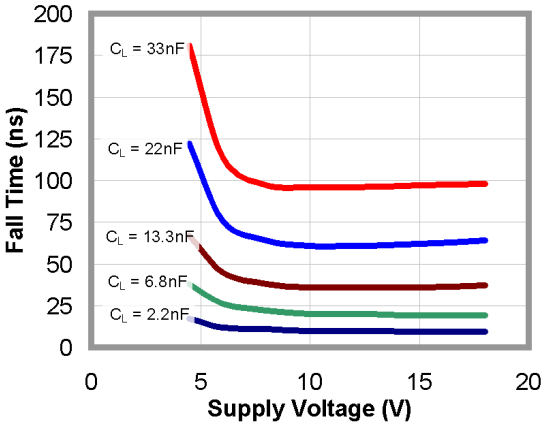

Figure 19. Fall Time vs. Supply Voltage

Share Feedback
Your Opinion Matters

TYPICAL PERFORMANCE CHARACTERISTICS

(TYPICAL CHARACTERISTICS ARE PROVIDED AT T_A = 25 °C AND V_{DD} = 12 V UNLESS OTHERWISE NOTED) (CONTINUED)

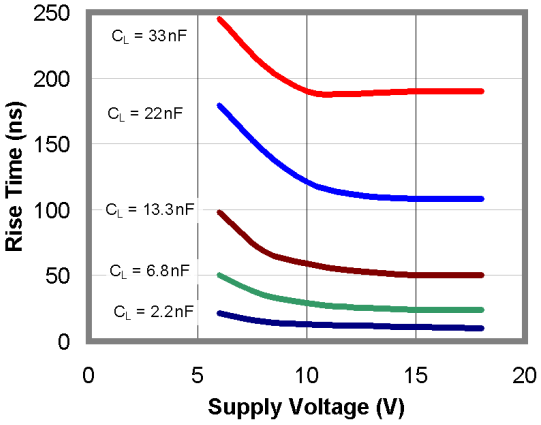

Figure 20. Rise Time vs. Supply Voltage

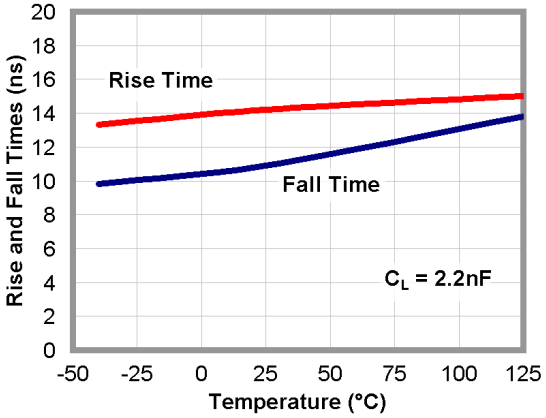

Figure 21. Rise and Fall Time vs. Temperature

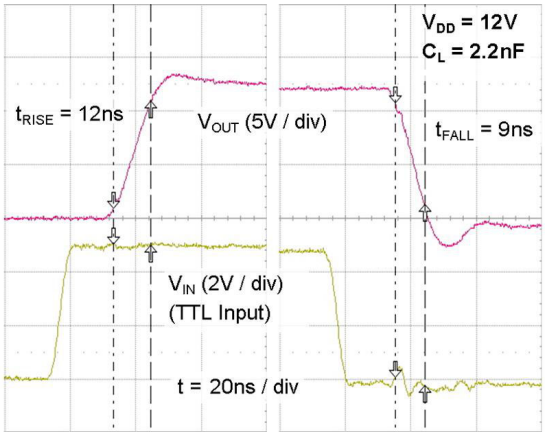

Figure 22. Rise / Fall Waveforms with 2.2 nF Load

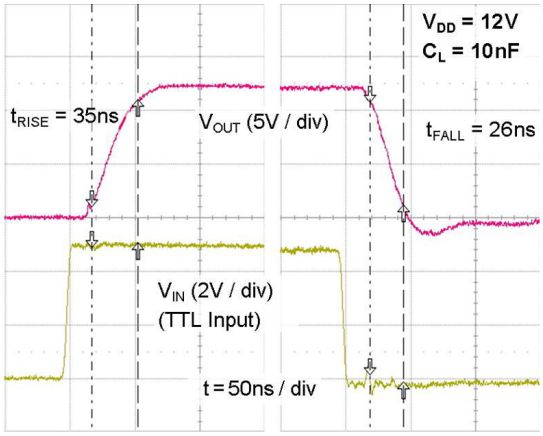

Figure 23. Rise / Fall Waveforms with 10 nF Load

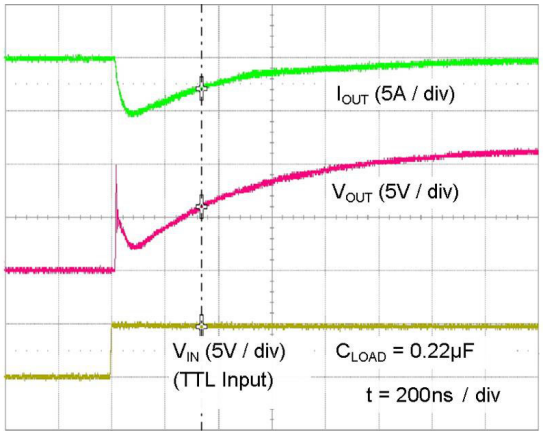

Figure 24. Quasi−Static Source Current with V_{DD} = 12 V (Note 11)

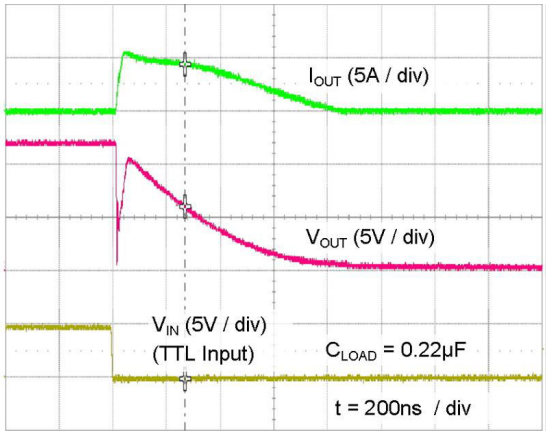

Figure 25. Quasi−Static Sink Current with V_{DD} = 12 V (Note 11)

Share Feedback
Your Opinion Matters

TYPICAL PERFORMANCE CHARACTERISTICS

(TYPICAL CHARACTERISTICS ARE PROVIDED AT T_A = 25 °C AND V_{DD} = 12 V UNLESS OTHERWISE NOTED) (CONTINUED)

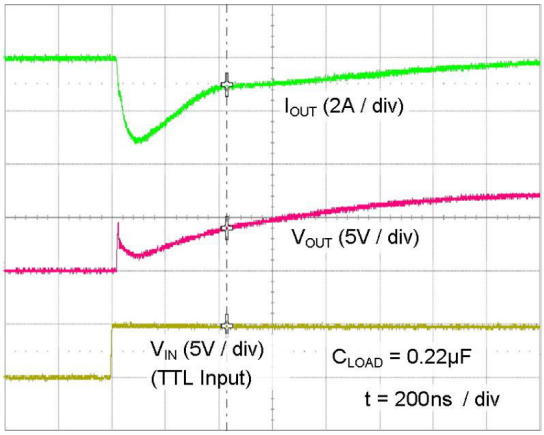

Figure 26. Quasi−Static Source Current with V_{DD} = 8 V (Note 11)

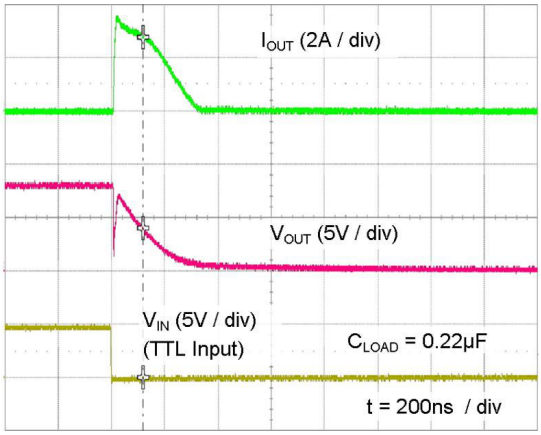

Figure 27. Quasi−Static Sink Current with V_{DD} = 8 V (Note 11)

10. For any inverting inputs pulled low, non-inverting inputs pulled high, or outputs driven high; static I_{DD} increases by the current flowing through the corresponding pull-up/down resistor show n in Figure 4 and Figure 5.
11. The initial spike in each current waveform is a measurement artifact caused by the stray inductance of the current-measurement loop.

TEST CIRCUIT

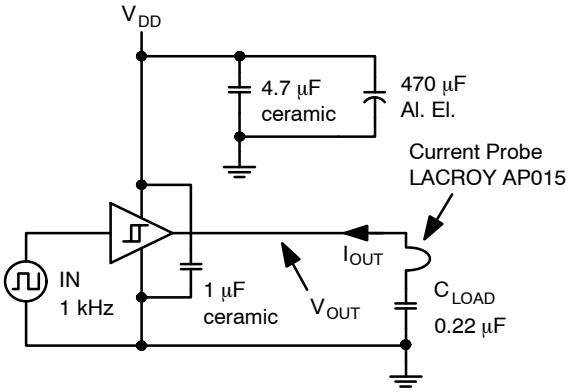

Figure 28. Quasi−Static I_{OUT} / V_{OUT} Test Circuit

Share Feedback
Your Opinion Matters

APPLICATIONS INFORMATION

Input Thresholds

The FAN3213 and the FAN3214 drivers consist of two identical channels that may be used independent ly at rated current or connected in parallel to double the individual current capacity.

The input thresholds meet industry-standard TTL-logic thresholds independent of the V_{DD} voltage, and there is a hysteresis voltage of approximately 0.4 V. These levels permit the inputs to be driven from a range of input logic signal levels for which a voltage over 2 V is considered logic HIGH. The driving signal for the TTL inputs should have fast rising and falling edges with a slew rate of 6 V/µs or faster, so a rise time from 0 to 3.3 V should be 550 ns or less. With reduced slew rate, circuit noise could cause the driver input voltage to exceed the hysteresis voltage and re-trigger the driver input, causing erratic operation.

Static Supply Current

In the I_{DD} (static) typical performance characteristics show n in Figure 8 and Figure 9, each curve is produced with both inputs floating and both outputs LOW to indicate the lowest static I_{DD} current. For other states, additional current flows through the 100 kΩ resistors on the inputs and outputs show n in the block diagram of each part (see Figure 4 and Figure 5). In these cases, the actual static I_{DD} current is the value obtained from the curves plus this additional current.

MillerDrive Gate Drive Technology

FAN3213 and FAN3214 gate drivers incorporate the Miller Drive architecture show n in Figure x28. For the output stage, a combination of bipolar and MOS devices provide large currents over a wide range of supply voltage and temperature variations. The bipolar devices carry the bulk of the current as OUT swings between 1/3 to 2/3 V_{DD} and the MOS devices pull the output to the HIGH or LOW rail.

The purpose of the Miller Drive architecture is to speed up switching by providing high current during the Miller plateau region when the gate-drain capacitance of the MOSFET is being charged or discharged as part of the turn-on/turn-off process.

For applications with zero voltage switching during the MOSFET turn-on or turn-off interval, the driver supplies high peak current for fast switching even though the Miller plateau is not present. This situation of ten occurs in synchronous rectifier applications because the body diode is generally conducting before the MOSFET is switched ON.

The output pin slew rate is determined by V_{DD} voltage and the load on the output. It is not user adjustable, but a series resistor can be added if a slower rise or fall time at the MOSFET gate is needed.

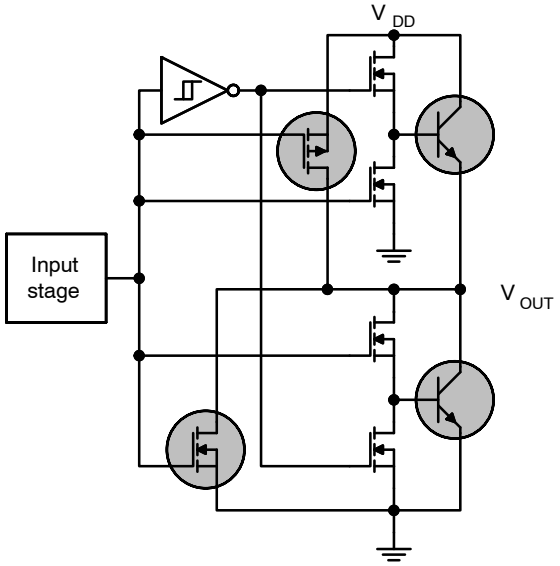

Figure 29. Miller Drive Output Architecture

Under-Voltage Lockout (UVLO)

The FAN321x startup logic is optimized to drive ground-referenced N-channel MOSFETs with an under-voltage lockout (UVLO) function to ensure that the IC starts up in an orderly fashion. When V_{DD} is rising, yet below the 3.9 V operational level, this circuit holds the output LOW, regardless of the status of the input pins. After the part is active, the supply voltage must drop 0.2 V before the part shuts down. This hysteresis helps prevent chatter when low V_{DD} supply voltages have noise from the power switching. This configuration is not suitable for driving high-side P-channel MOSFETs because the low output voltage of the driver would turn the P-channel MOSFET on with V_{DD} below 3.9 V.

V_{DD} Bypass Capacitor Guidelines

To enable this IC to turn a device ON quickly, a local high-frequency bypass capacitor, C_{BYP}, with low ESR and ESL should be connected between the VDD and GND pins with minimal trace length. This capacitor is in addition to bulk electrolytic capacitance of 10 µF to 47 µF commonly found on driver and controller bias circuits.

A typical criterion for choosing the value of C_{BYP} is to keep the ripple voltage on the V_{DD} supply to ≤5%. This is often achieved with a value ≥20 times the equivalent load capacitance C_{EQV}, defined here as Q_{GATE}/V_{DD}. Ceramic capacitors of 0.1 µF to 1 µF or larger are common choices, as are dielectrics, such as X5R and X7R, with good temperature characteristics and high pulse current capability.

Share Feedback
Your Opinion Matters

If circuit noise affects normal operation, the value of C_{BYP} may be increased, to 50−100 times the C_{EQV}, or CBYP may be split into two capacitors. One should be a larger value, based on equivalent load capacitance, and the other a smaller value, such as 1−10 nF mounted closest to the VDD and GND pins to carry the higher-frequency components of the current pulses. The bypass capacitor must provide the pulsed current from both of the driver channels and, if the drivers are switching simultaneously, the combined peak current sourced from the C_{BYP} would be twice as large as when a single channel is switching.

Layout and Connection Guidelines

The FAN3213 and FAN3214 gate drivers incorporate fast-reacting input circuits, short propagation delays, and powerful output stages capable of delivering current peaks over 4 A to facilitate voltage transition times from under 10 ns to over 150 ns. The following layout and connection guidelines are strongly recommended:

- Keep high-current output and power ground paths separate from logic input signals and signal ground paths. This is especially critical for TTL-level logic thresholds at driver input pins.
- Keep the driver as close to the load as possible to minimize the length of high-current traces. This reduces the series inductance to improve high-speed switching, while reducing the loop area that can radiate EMI to the driver inputs and surrounding circuitry.
- If the inputs to a channel are not externally connected, the internal 100 kΩ resistors indicated on block diagrams command a low output. In noisy environments, it may be necessary to tie inputs of an unused channel to VDD or GND using short traces to prevent noise from causing spurious output switching.
- Many high-speed power circuits can be susceptible to noise injected from their own output or other external sources, possibly causing output re-triggering. These effects can be obvious if the circuit is tested in breadboard or non-optimal circuit layouts with long input or output leads. For best results, make connections to all pins as short and direct as possible.
- FAN3213 and FAN3214 are pin-compatible with many other industry-standard drivers.
- The turn-on and turn-off current paths should be minimized, as discussed in the following section.

Figure 30 shows the pulsed gate drive current path when the gate driver is supplying gate charge to turn the MOSFET on. The current is supplied from the local bypass capacitor, C_{BYP}, and flows through the driver to the MOSFET gate and to ground. To reach the high peak currents possible, the resistance and inductance in the path should be minimized. The localized C_{BYP} acts to contain the high peak current pulses within this driver-MOSFET circuit , preventing them from disturbing the sensitive analog circuitry in the PWM controller.

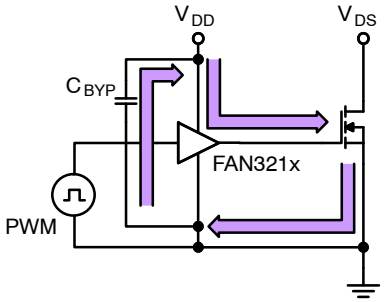

Figure 30. Current Path for MOSFET Turn−On

Figure 31 shows the current path when the gate driver turns the MOSFET OFF. Ideally, the driver shunts the current directly to the source of the MOSFET in a small circuit loop. For fast turn-off times, the resistance and inductance in this path should be minimized.

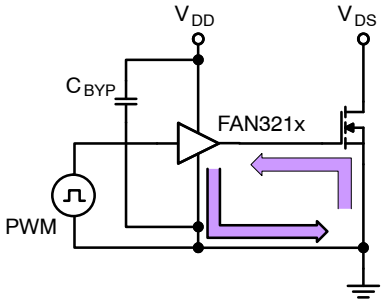

Figure 31. Current Path for MOSFET Turn−Off

Operational Waveforms

At power-up, the driver output remains LOW until the V_{DD} voltage reaches the turn-on threshold. The magnitude of the OUT pulses rises with V_{DD} until steady-state V_{DD} is reached. The non-inverting operation illustrated in Figure 32 shows that the output remains LOW until the UVLO threshold is reached, then the output is in-phase with the input.

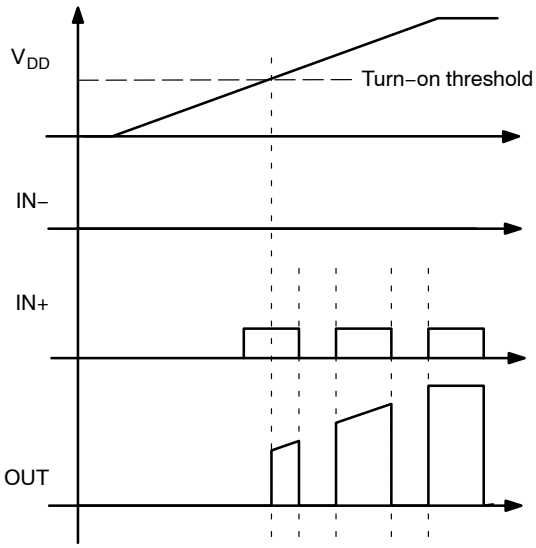

Figure 32. Non−Inverting Startup Waveforms

Share Feedback
Your Opinion Matters

The inverting configuration of startup waveforms are shown in Figure 33. With IN+ tied to V_{DD} and the input signal applied to IN–, the OUT pulses are inverted with respect to the input. At power-up, the inverted output remains LOW until the V_{DD} voltage reaches the turn-on threshold, then it follows the input with inverted phase.

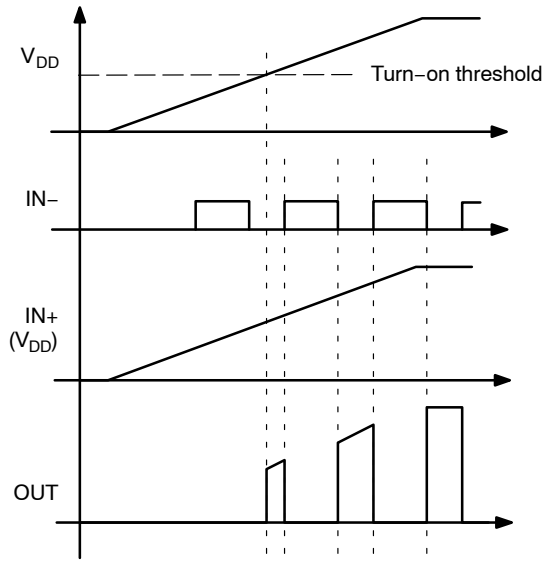

Figure 33. Inverting Startup Waveforms

Thermal Guidelines

Gate drivers used to switch MOSFETs and IGBTs at high frequencies can dissipate significant amounts of power. It is important to determine the driver power dissipation and the resulting junction temperature in the application to ensure that the part is operating within acceptable temperature limits.

The total power dissipation in a gate driver is the sum of two components, P_{GATE} and $P_{DYNAMIC}$:

$$P_{TOTAL} = P_{GATE} + P_{DYNAMIC} \quad \text{(eq. 1)}$$

P_{GATE} (Gate Driving Loss): The most significant power loss results from supplying gate current (charge per unit time) to switch the load MOSFET on and off at the switching frequency. The power dissipation that results from driving a MOSFET at a specified gate-source voltage, V_{GS}, with gate charge, Q_G, at switching frequency, f_{SW}, is determined by:

$$P_{GATE} = Q_G \cdot V_{GS} \cdot f_{SW} \cdot n \quad \text{(eq. 2)}$$

where n is the number of driver channels in use (1 or 2).

$P_{DYNAMIC}$ (Dynamic Pre-Drive/Shoot-through Current): A power loss resulting from internal current consumption under dynamic operating conditions, including pin pull-up/pull-down resistors. The internal current consumption ($I_{DYNAMIC}$) can be estimated using the graphs in Figure 10 of the Typical Performance Characteristics to determine the current $I_{DYNAMIC}$ drawn from V_{DD} under actual operating conditions:

$$P_{DYMANIC} = I_{DYNAMIC} \cdot V_{DD} \cdot n \quad \text{(eq. 3)}$$

where n is the number of driver ICs in use. Note that n is usually be one IC even if the IC has two channels, unless two or more driver ICs are in parallel to drive a large load.

Once the power dissipated in the driver is determined, the driver junction rise with respect to circuit board can be evaluated using the following thermal equation, assuming ψ_{JB} was determined for a similar thermal design (heat sinking and air flow):

$$T_J = P_{TOTAL} \cdot \Psi_{JB} + T_B \quad \text{(eq. 4)}$$

where:

T_J = driver junction temperature;

ψ_{JB} = (psi) thermal characterization parameter relating temperature rise to total power dissipation; and

T_B = board temperature in location as defined in the Thermal Characteristics table.

To give a numerical example, assume for a 12 V VDD (Vibas) system, the synchronous rectifier switches of Figure 34 have a total gate charge of 60 nC at V_{GS} = 7 V. Therefore, two devices in parallel would have 120 nC gate charge. At a switching frequency of 300 kHz, the total power dissipation is:

$$P_{GATE} = 120\ \text{nC} \cdot 7\ \text{V} \cdot 300\ \text{kHz} \cdot 2 = 0.504\ \text{W} \quad \text{(eq. 5)}$$

$$P_{DYNAMIC} = 3.0\ \text{mA} \cdot 12\ \text{V} \cdot 1 = 0.036\ \text{W} \quad \text{(eq. 6)}$$

$$P_{TOTAL} = 0.540\ \text{W} \quad \text{(eq. 7)}$$

The SOIC-8 has a junction-to-board thermal characterization parameter of ψ_{JB} = 42 °C/W. In a system application, the localized temperature around the device is a function of the layout and construction of the PCB along with airflow across the surfaces. To ensure reliable operation, the maximum junction temperature of the device must be prevented from exceeding the maximum rating of 150 °C; with 80% derating, T_J would be limited to 120 °C. Rearranging Equation 4 determines the board temperature required to maintain the junction temperature below 120 °C:

$$T_{B,MAX} = T_J - P_{TOTAL} \cdot \Psi_{JB} \quad \text{(eq. 8)}$$

$$T_{B,MAX} = 120°\text{C} - 0.54\ \text{W} \cdot 42°\text{C/W} = 97°\text{C} \quad \text{(eq. 9)}$$

Share Feedback
Your Opinion Matters

TYPICAL APPLICATION DIAGRAMS

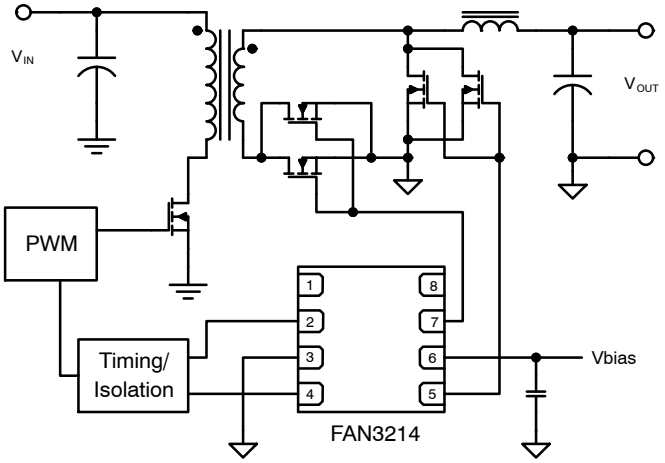

Figure 34. High−Current Forward Converter with Synchronous Rectification

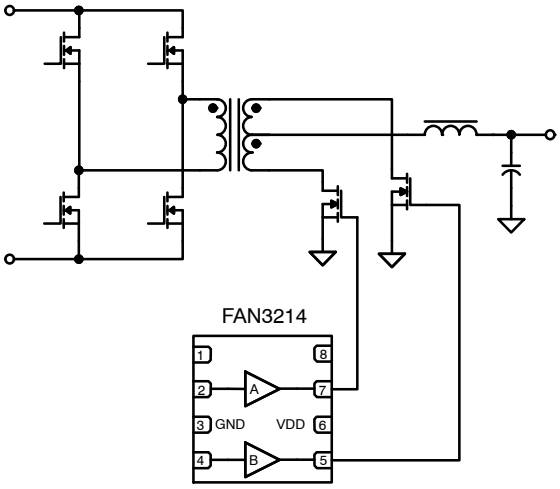

Figure 35. Center−Tapped Bridge Output with Synchronous Rectifiers

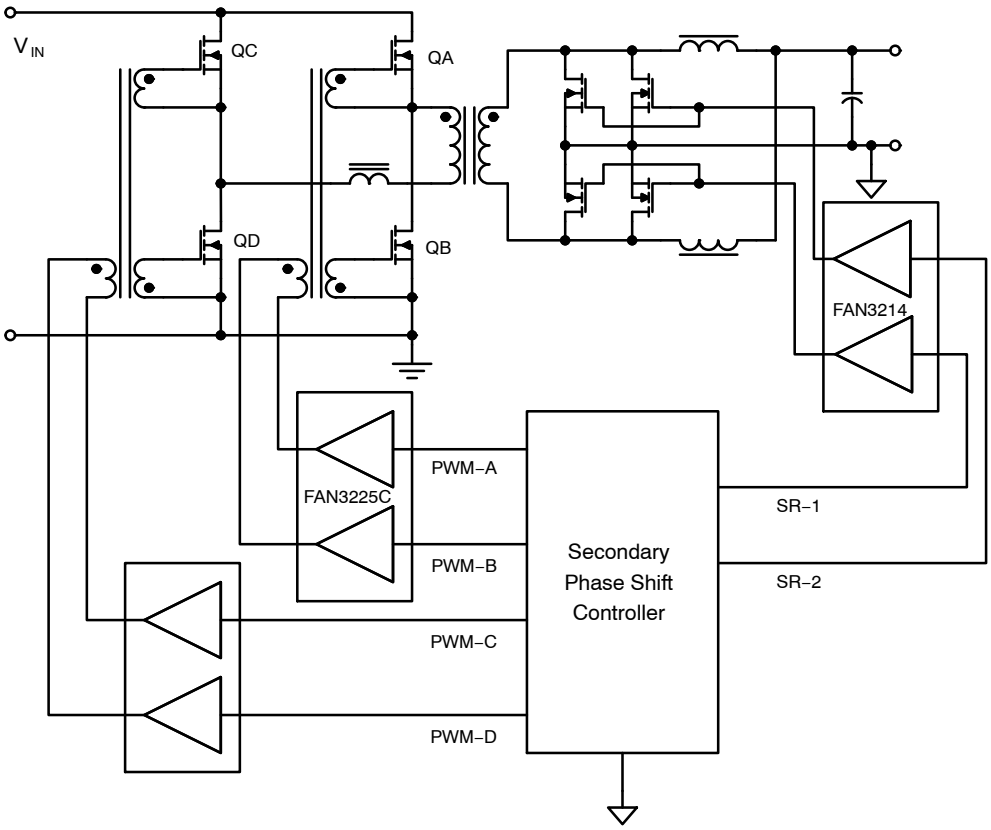

Figure 36. Secondary Controlled Full Bridge with Current Doubler Output, Synchronous Rectifiers (Simplified)

Share Feedback
Your Opinion Matters

ORDERING INFORMATION

Part Number	Logic	Input Threshold	Package	Shipping†
FAN3214TMX	Dual Non-Inverting Channels	TTL	SOIC-8	2,500 / Tape & Reel

DISCONTINUED (Note 12)

FAN3213TMX	Dual Inverting Channels	TTL	SOIC-8	2,500 / Tape & Reel

† For information on tape and reel specifications, including part orientation and tape sizes, please refer to our Tape and Reel Packaging Specifications Brochure, BRD8011/D.

12. **DISCONTINUED:** This device is not recommended for new design. Please contact your **onsemi** representative for information. The most current information on this device may be available on www.onsemi.com.

Share Feedback
Your Opinion Matters

Table 1. RELATED PRODUCTS

Type	Part Number	Gate Drive (Note 13) (Sink/Src)	Input Threshold	Logic	Package
Single 1 A	FAN3111C	+1.1 A / −0.9 A	CMOS	Single Channel of Dual-Input/Single-Output	SOT23-5, MLP6
Single 1 A	FAN3111E	+1.1 A / −0.9 A	External (Note 14)	Single Non-Inverting Channel with External Reference	SOT23-5, MLP6
Single 2 A	FAN3100C	+2.5 A / −1.8 A	CMOS	Single Channel of Two-Input/One-Output	SOT23-5, MLP6
Single 2 A	FAN3100T	+2.5 A / −1.8 A	TTL	Single Channel of Two-Input/One-Output	SOT23-5, MLP6
Single 2 A	FAN3180	+2.4 A / −1.6 A	TTL	Single Non-Inverting Channel + 3.3-V LDO	SOT23-5
Dual 2 A	FAN3216T	+2.4 A / −1.6 A	TTL	Dual Inverting Channels	SOIC8
Dual 2 A	FAN3217T	+2.4 A / −1.6 A	TTL	Dual Non-Inverting Channels	SOIC8
Dual 2 A	FAN3226C	+2.4 A / −1.6 A	CMOS	Dual Inverting Channels + Dual Enable	SOIC8, MLP8
Dual 2 A	FAN3226T	+2.4 A / −1.6 A	TTL	Dual Inverting Channels + Dual Enable	SOIC8, MLP8
Dual 2 A	FAN3227C	+2.4 A / −1.6 A	CMOS	Dual Non-Inverting Channels + Dual Enable	SOIC8, MLP8
Dual 2 A	FAN3227T	+2.4 A / −1.6 A	TTL	Dual Non-Inverting Channels + Dual Enable	SOIC8, MLP8
Dual 2 A	FAN3228C	+2.4 A / −1.6 A	CMOS	Dual Channels of Two-Input/One-Output, Pin Config.1	SOIC8, MLP8
Dual 2 A	FAN3228T	+2.4 A / −1.6 A	TTL	Dual Channels of Two-Input/One-Output, Pin Config.1	SOIC8, MLP8
Dual 2 A	FAN3229C	+2.4 A / −1.6 A	CMOS	Dual Channels of Two-Input/One-Output, Pin Config.2	SOIC8, MLP8
Dual 2 A	FAN3229T	+2.4 A / −1.6 A	TTL	Dual Channels of Two-Input/One-Output, Pin Config.2	SOIC8, MLP8
Dual 2 A	FAN3268T	+2.4 A / −1.6 A	TTL	20 V Non-Inverting Channel (NMOS) and Inverting Channel (PMOS) + Dual Enables	SOIC8
Dual 2 A	FAN3278T	+2.4 A / −1.6 A	TTL	30 V Non-Inverting Channel (NMOS) and Inverting Channel (PMOS) + Dual Enables	SOIC8
Dual 4 A	FAN3213T	+2.5 A / −1.8 A	TTL	Dual Inverting Channels	SOIC8
Dual 4 A	FAN3214T	+2.5 A / −1.8 A	TTL	Dual Non-Inverting Channels	SOIC8
Dual 4 A	FAN3223C	+4.3 A / −2.8 A	CMOS	Dual Inverting Channels + Dual Enable	SOIC8, MLP8
Dual 4 A	FAN3223T	+4.3 A / −2.8 A	TTL	Dual Inverting Channels + Dual Enable	SOIC8, MLP8
Dual 4 A	FAN3224C	+4.3 A / −2.8 A	CMOS	Dual Non-Inverting Channels + Dual Enable	SOIC8, MLP8
Dual 4 A	FAN3224T	+4.3 A / −2.8 A	TTL	Dual Non-Inverting Channels + Dual Enable	SOIC8, MLP8
Dual 4 A	FAN3225C	+4.3 A / −2.8 A	CMOS	Dual Channels of Two-Input/One-Output	SOIC8, MLP8
Dual 4 A	FAN3225T	+4.3 A / −2.8 A	TTL	Dual Channels of Two-Input/One-Output	SOIC8, MLP8
Single 9 A	FAN3121C	+9.7 A / −7.1 A	CMOS	Single Inverting Channel + Enable	SOIC8, MLP8
Single 9 A	FAN3121T	+9.7 A / −7.1 A	TTL	Single Inverting Channel + Enable	SOIC8, MLP8
Single 9 A	FAN3122C	+9.7 A / −7.1 A	CMOS	Single Non-Inverting Channel + Enable	SOIC8, MLP8
Single 9 A	FAN3122T	+9.7 A / −7.1 A	TTL	Single Non-Inverting Channel + Enable	SOIC8, MLP8
Dual 12 A	FAN3240	+12.0 A	TTL	Dual-Coil Relay Driver, Timing Config. 0	SOIC8
Dual 12 A	FAN3241	+12.0 A	TTL	Dual-Coil Relay Driver, Timing Config. 1	SOIC8

13. Typical currents with OUTx at 6 V and V_{DD} = 12 V.
14. Thresholds proportional to an externally supplied reference voltage.

MillerDrive is trademark of Semiconductor Components Industries, LLC (SCILLC) or its subsidiaries in the United States and/or other countries.

Share Feedback
Your Opinion Matters

SOIC8
CASE 751EB
ISSUE A

DATE 24 AUG 2017

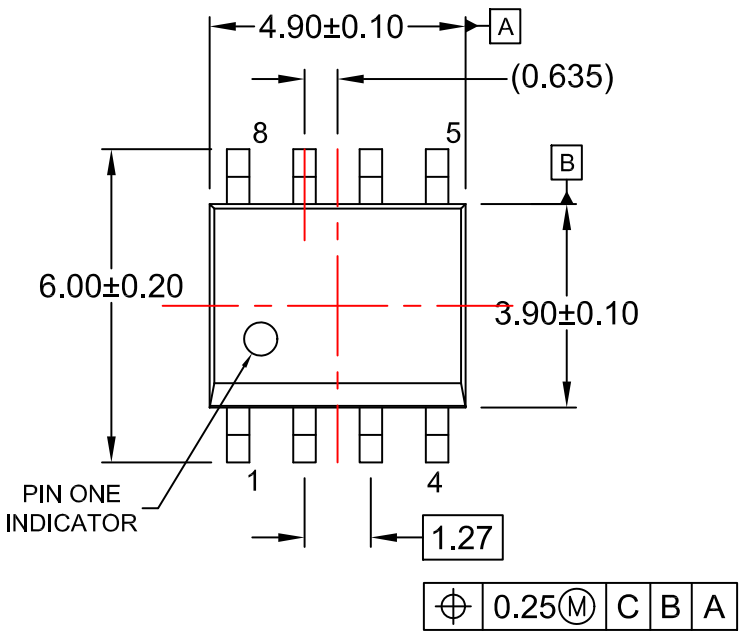

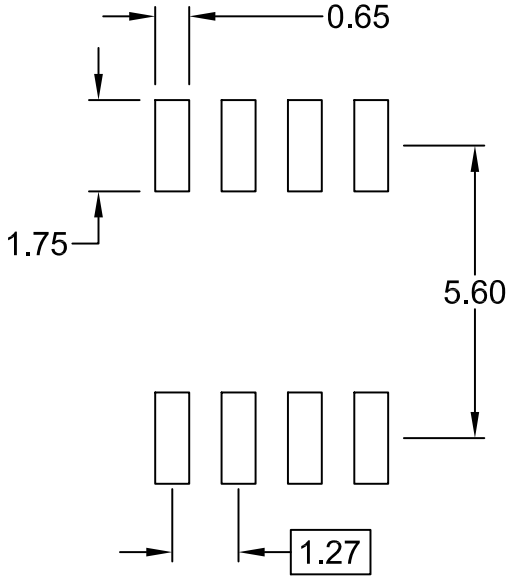

LAND PATTERN RECOMMENDATION

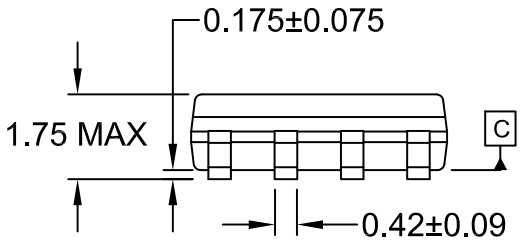

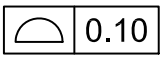

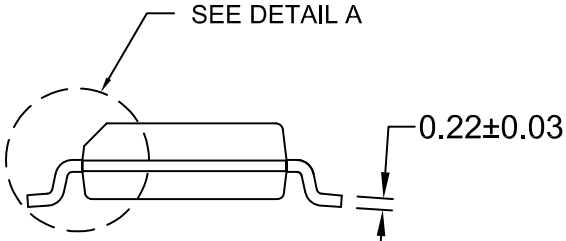

OPTION A - BEVEL EDGE

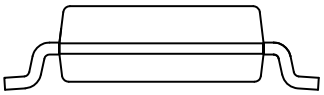

OPTION B - NO BEVEL EDGE

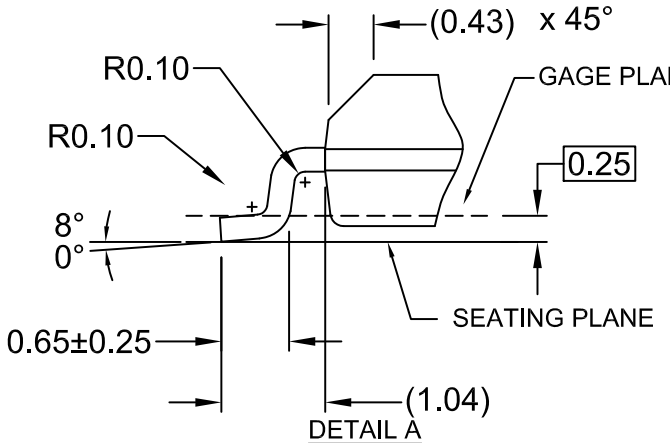

DETAIL A
SCALE: 2:1

NOTES:
A) THIS PACKAGE CONFORMS TO JEDEC MS-012, VARIATION AA.
B) ALL DIMENSIONS ARE IN MILLIMETERS.
C) DIMENSIONS DO NOT INCLUDE MOLD FLASH OR BURRS.
D) LANDPATTERN STANDARD: SOIC127P600X175-8M

DOCUMENT NUMBER:	**98AON13735G**	Electronic versions are uncontrolled except when accessed directly from the Document Repository. Printed versions are uncontrolled except when stamped "CONTROLLED COPY" in red.
DESCRIPTION:	**SOIC8**	**PAGE 1 OF 1**

onsemi and onsemi are trademarks of Semiconductor Components Industries, LLC dba **onsemi** or its subsidiaries in the United States and/or other countries. **onsemi** reserves the right to make changes without further notice to any products herein. **onsemi** makes no warranty, representation or guarantee regarding the suitability of its products for any particular purpose, nor does **onsemi** assume any liability arising out of the application or use of any product or circuit, and specifically disclaims any and all liability, including without limitation special, consequential or incidental damages. **onsemi** does not convey any license under its patent rights nor the rights of others.

onsemi, onsemi, and other names, marks, and brands are registered and/or common law trademarks of Semiconductor Components Industries, LLC dba "**onsemi**" or its affiliates and/or subsidiaries in the United States and/or other countries. **onsemi** owns the rights to a number of patents, trademarks, copyrights, trade secrets, and other intellectual property. A listing of **onsemi**'s product/patent coverage may be accessed at www.onsemi.com/site/pdf/Patent−Marking.pdf. **onsemi** reserves the right to make changes at any time to any products or information herein, without notice. The information herein is provided "as−is" and **onsemi** makes no warranty, representation or guarantee regarding the accuracy of the information, product features, availability, functionality, or suitability of its products for any particular purpose, nor does **onsemi** assume any liability arising out of the application or use of any product or circuit, and specifically disclaims any and all liability, including without limitation special, consequential or incidental damages. Buyer is responsible for its products and applications using **onsemi** products, including compliance with all laws, regulations and safety requirements or standards, regardless of any support or applications information provided by **onsemi**. "Typical" parameters which may be provided in **onsemi** data sheets and/or specifications can and do vary in different applications and actual performance may vary over time. All operating parameters, including "Typicals" must be validated for each customer application by customer's technical experts. **onsemi** does not convey any license under any of its intellectual property rights nor the rights of others. **onsemi** products are not designed, intended, or authorized for use as a critical component in life support systems or any FDA Class 3 medical devices or medical devices with a same or similar classification in a foreign jurisdiction or any devices intended for implantation in the human body. Should Buyer purchase or use **onsemi** products for any such unintended or unauthorized application, Buyer shall indemnify and hold **onsemi** and its officers, employees, subsidiaries, affiliates, and distributors harmless against all claims, costs, damages, and expenses, and reasonable attorney fees arising out of, directly or indirectly, any claim of personal injury or death associated with such unintended or unauthorized use, even if such claim alleges that **onsemi** was negligent regarding the design or manufacture of the part. **onsemi** is an Equal Opportunity/Affirmative Action Employer. This literature is subject to all applicable copyright laws and is not for resale in any manner.

ADDITIONAL INFORMATION

TECHNICAL PUBLICATIONS:
Technical Library: www.onsemi.com/design/resources/technical−documentation
onsemi Website: www.onsemi.com

ONLINE SUPPORT: www.onsemi.com/support
For additional information, please contact your local Sales Representative at
www.onsemi.com/support/sales