Enhancement Mode Gallium Nitride (GaN) HEMT

100 V, 2.7 mΩ, 183 A, PTFP-N9

NTLCC3D5N10GN1

$V_{(BR)DSS}$	$R_{DS(ON)}$ TYP	I_{DS} MAX
100 V	2.7 mΩ	183 A

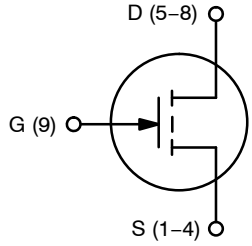

Features

- Low $R_{DS(ON)}$ to Minimize Conduction Losses
- Ultra Low Gate Charge for High Speed Switching
- FOM-Q_G = 20.5 nC*mΩ
- Small Footprint for High Density PCB Design
- Pb-Free, Halogen Free and RoHS Compliant

Typical Applications

- High Density Power Modules
- High Frequency DC-DC Converters
- High Power Synchronous Rectifiers
- Motor Drivers

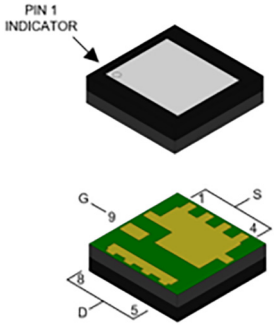

PTFP-N9 3.30 x 3.30 x 0.87, 0.65P
CASE 522AE

MAXIMUM RATINGS (T_J = 25 °C unless otherwise noted)

Parameter	Symbol	Value	Unit
Drain-to-Source Voltage	V_{DSS}	100	V
Drain-to-Source Transient Voltage, total time = 1 h, non-repetitive	$V_{DS(TRAN)}$	120	V
Gate-to-Source Voltage	V_{GS}	−4 to 6	V
Gate-to-Source Transient Voltage, t_P = 100 ns, f_P = 100 kHz, open drain	$V_{GS(PULSE)}$	6.5	V
Continuous Drain Current, T_{CASE} = 25 °C T_{CASE} = 100 °C	I_{DS}	183 116	A
Pulsed Drain Current, t_P < 100 μs, T_J = 25 °C T_J = 150 °C	$I_{DS(PULSE)}$	380 280	A
Power Dissipation, V_{GS} = 5 V, T_{CASE} = 25 °C	P_{TOT}	250	W
Operating Junction Temperature	T_J	−40 to 150	°C
Storage Temperature	T_{STG}	−55 to 150	°C

Stresses exceeding those listed in the Maximum Ratings table may damage the device. If any of these limits are exceeded, device functionality should not be assumed, damage may occur and reliability may be affected.

MARKING DIAGRAM

3D5N10 = Specific Device Code
A = Assembly Location
Y = Year
WW = Work Week
ZZ = Lot Traceability

ORDERING INFORMATION

See detailed ordering and shipping information on page 6 of this data sheet.

© Semiconductor Components Industries, LLC, 2026

THERMAL CHARACTERISTICS

Parameter	Symbol	Value	Unit
Junction-to-Cases	$R_{\theta JC}$	0.5	°C/W
Junction-to-Board	$R_{\theta JB}$	4.2	°C/W
Junction-to-Ambient (Note 1)	$R_{\theta JA}$	47	°C/W
Maximum Soldering Temperature (MSL3)	T_{SLD}	260	°C

1. Device on 1 in^2, 2 oz copper pad on single layer FR-4 PCB

ELECTRICAL CHARACTERISTICS (T_J = 25 °C unless otherwise specified)

Parameter	Symbol	Test Conditions	Min	Typ	Max	Unit
OFF CHARACTERISTICS						
Drain-to-Source Breakdown Voltage	$V_{(BR)DSS}$	V_{GS} = 0 V	100			V
Drain-to-Source Leakage Current	I_{DSS}	V_{GS} = 0 V, V_{DS} = 100 V		0.6	100	μA
		V_{GS} = 0 V, V_{DS} = 100 V, T_J = 125 °C (Note 3)		100		
Gate-to-Source Leakage Current	I_{GSS}	V_{GS} = 6 V, V_{DS} = 0 V		0.3	100	μA
		V_{GS} = 6 V, V_{DS} = 0 V, T_J = 125 °C (Note 3)		15		μA
ON CHARACTERISTICS (Note 2)						
Drain-to-Source On Resistance	$R_{DS(ON)}$	V_{GS} = 5 V, I_{DS} = 25 A		2.7	3.5	mΩ
		V_{GS} = 5 V, I_{DS} = 25 A, T_J = 125 °C (Note 3)		4.8		
Gate Threshold Voltage	$V_{GS(TH)}$	V_{DS} = V_{GS}, I_{DS} = 7.6 mA, T_J = 25 °C	0.8	1.1	2.1	V
		V_{DS} = V_{GS}, I_{DS} = 7.6 mA, T_J = 125 °C (Note 3)		0.9		
DYNAMIC CHARACTERISTICS (Note 3)						
Input Capacitance	C_{ISS}	V_{DS} = 50 V, V_{GS} = 0 V, f = 1 MHz		905		pF
Output Capacitance	C_{OSS}			414		
Reverse Transfer Capacitance	C_{RSS}			6.3		
Output Capacitance, Energy Related	$C_{OSS(ER)}$	V_{DS} = 0 V to 50 V, V_{GS} = 0 V		613		pF
Output Capacitance, Time Related	$C_{OSS(TR)}$			873		
Output Charge	Q_{OSS}			44		nC
Output Capacitance Stored Energy	E_{OSS}			0.77		μJ
Gate Resistance	R_G	f = 5 MHz		1.4		Ω
Gate Charge	Q_G	V_{DS} = 50 V, I_{DS} = 25 A, V_{GS} = 0/5 V		7.3		nC
Gate-to-Source Charge	Q_{GS}			2.2		
Gate-to-Drain Charge	Q_{GD}			1.1		
Gate Plateau Voltage	V_{PLAT}			2.1		V
REVERSE CONDUCTION CHARACTERISTICS						
Source-to-Drain Reverse Voltage	V_{SD}	V_{GS} = −3 V, I_{SD} = 25 A (Note 3)		4.9		V
		V_{GS} = 0 V, I_{SD} = 25 A		1.8		
		V_{GS} = 5 V, I_{SD} = 25 A (Note 3)		0.07		

Product parametric performance is indicated in the Electrical Characteristics for the listed test conditions, unless otherwise noted. Product performance may not be indicated by the Electrical Characteristics if operated under different conditions.

2. No prior drain bias or switching stress is applied during the measurement of $V_{GS(TH)}$ and $R_{DS(ON)}$.
3. Defined by design, not subject to production test.

Share Feedback
Your Opinion Matters

TYPICAL CHARACTERISTICS (T_J = 25 °C unless otherwise specified)

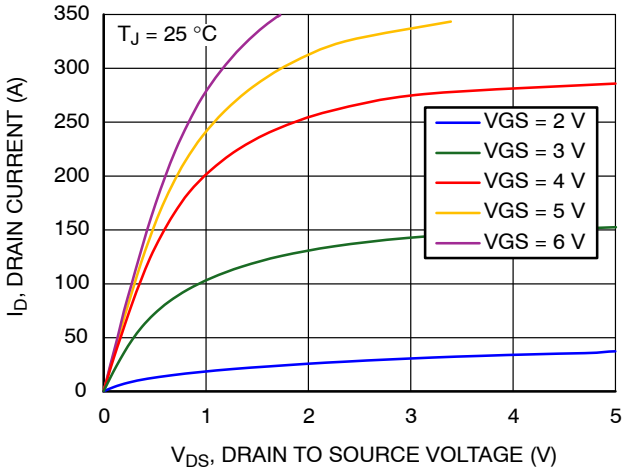

Figure 1. Output Characteristics at T_J = 25 °C

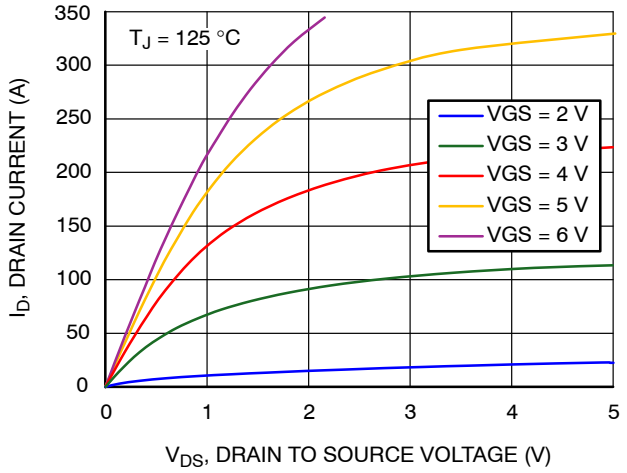

Figure 2. Output Characteristics at T_J = 125 °C

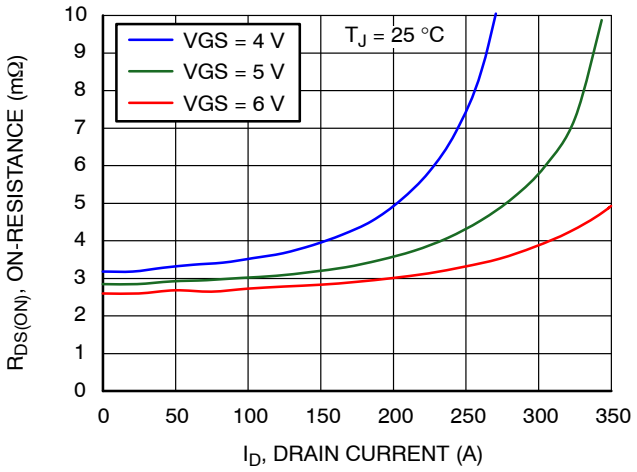

Figure 3. On-Resistance vs. Drain Current at T_J = 25 °C

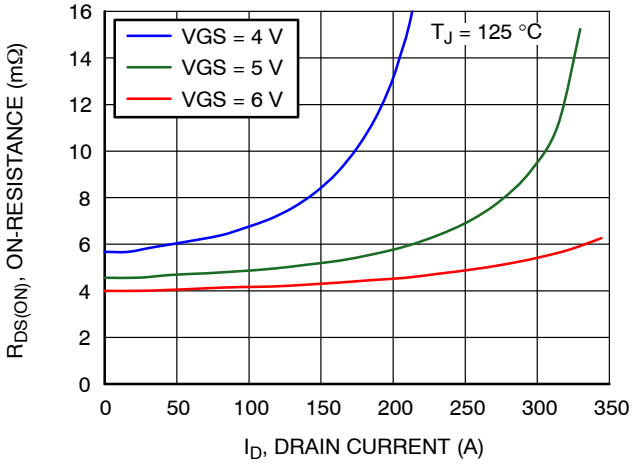

Figure 4. On-Resistance vs. Drain Current at T_J = 125 °C

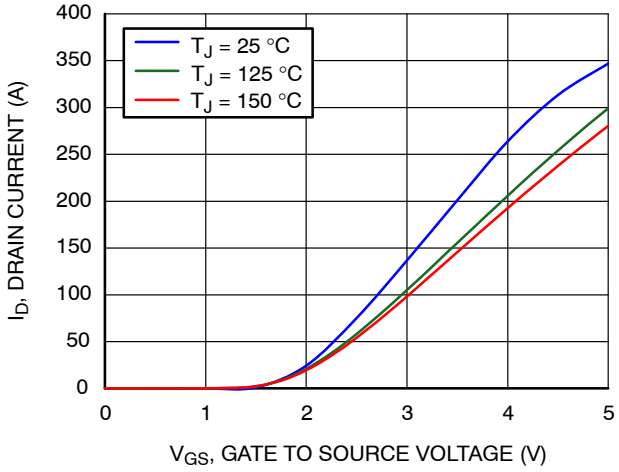

Figure 5. Transfer Characteristics at V_{DS} = 3 V

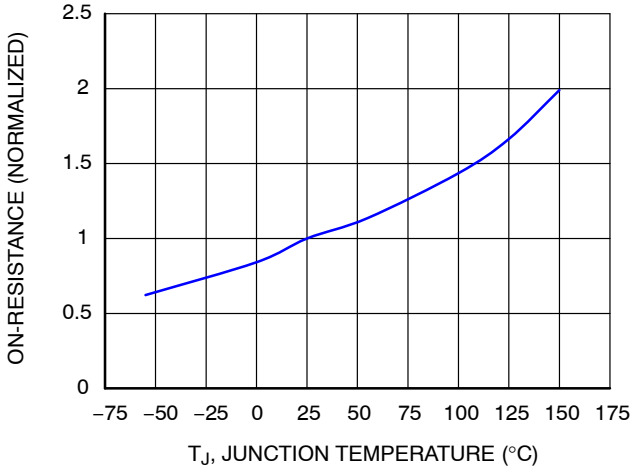

Figure 6. Normalized On-Resistance vs. Temperature at V_{GS} = 5 V

Share Feedback
Your Opinion Matters

TYPICAL CHARACTERISTICS (T_J = 25 °C unless otherwise specified) (continued)

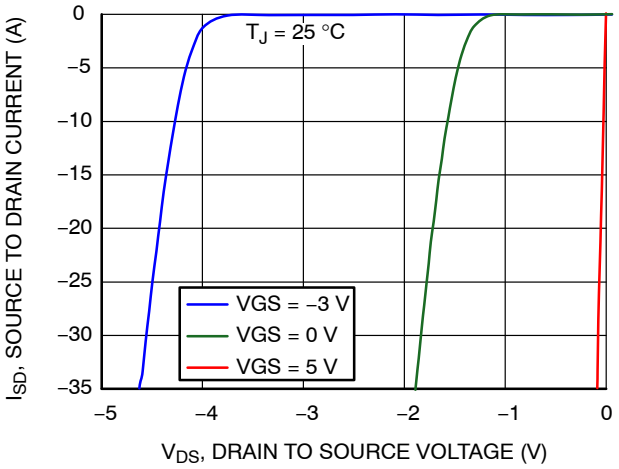

Figure 7. Reverse Conduction Characteristics at T_J = 25 °C

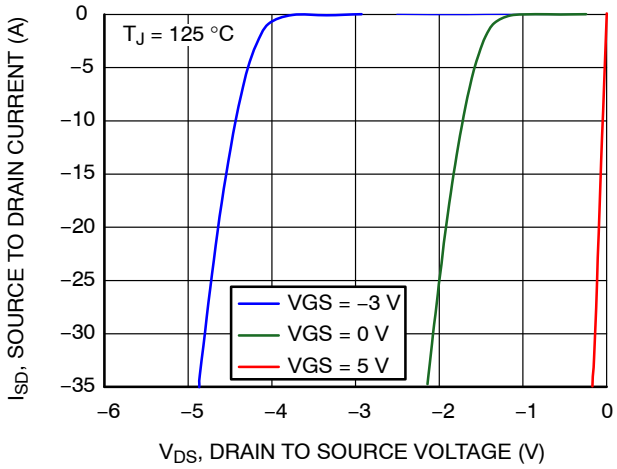

Figure 8. Reverse Conduction Characteristics at T_J = 125 °C

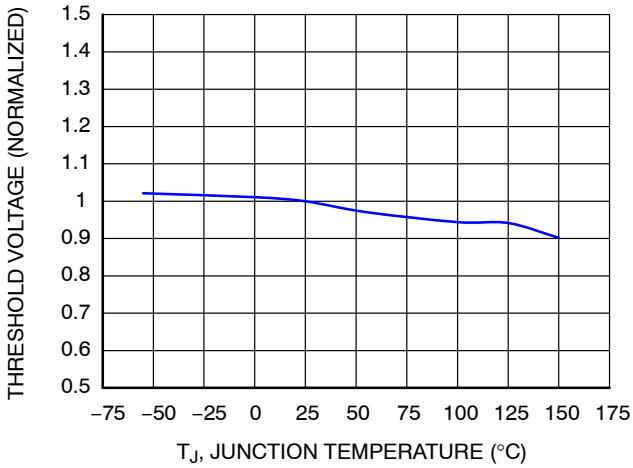

Figure 9. Normalized Threshold Voltage vs. Temperature

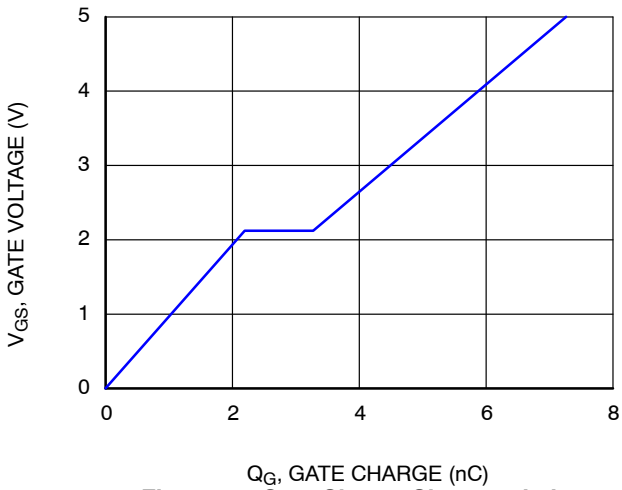

Figure 10. Gate Charge Characteristics at I_{DS} = 25 A

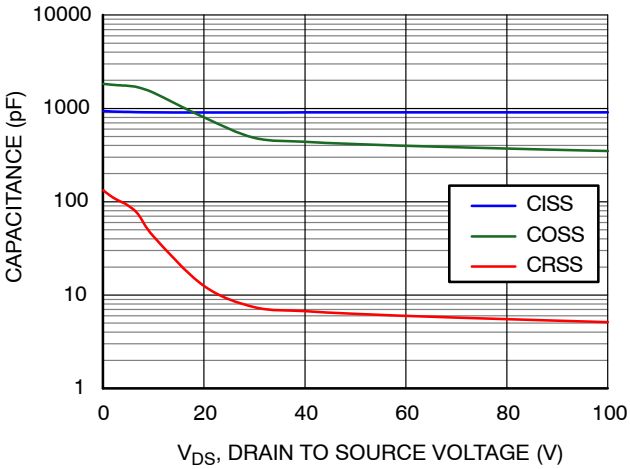

Figure 11. Capacitance Characteristics

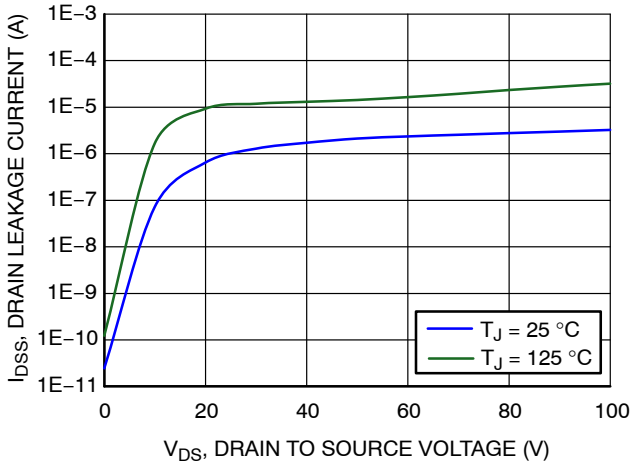

Figure 12. Drain Leakage Characteristics

Share Feedback
Your Opinion Matters

TYPICAL CHARACTERISTICS (T_J = 25 °C unless otherwise specified) (continued)

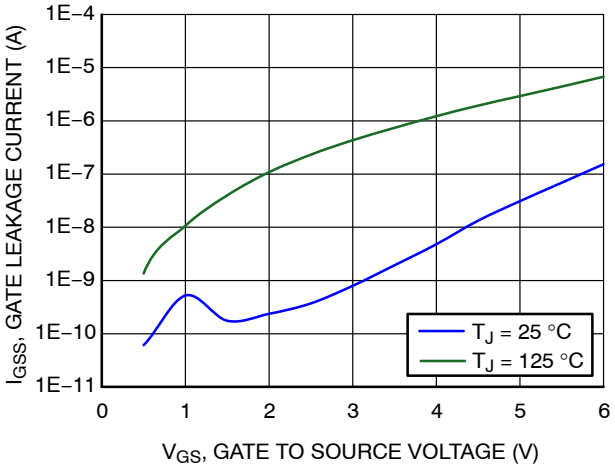

Figure 13. Gate Leakage Characteristics

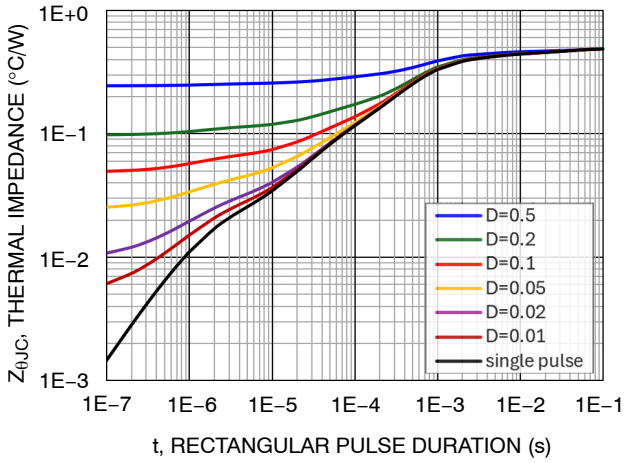

Figure 14. Transient Thermal Impedance

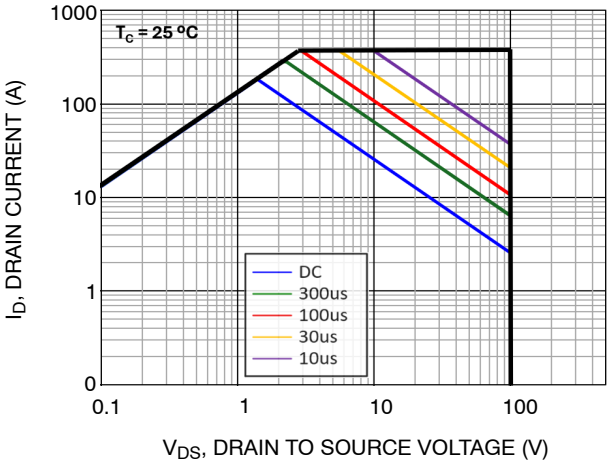

Figure 15. Safe Operating Area at T_C = 25 °C

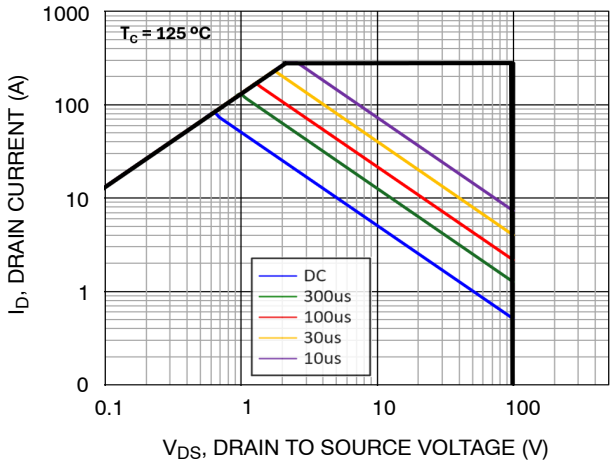

Figure 16. Safe Operating Area at T_C = 125 °C

Share Feedback
Your Opinion Matters

Gate Drive Guidelines

This GaN device utilizes a Schottky gate structure, which behaves similarly to a MOSFET with a purely capacitive input and does not require continuous gate current during the on-state. For optimal performance, apply a low-impedance gate driver with appropriate gate resistance to control switching speed and limit ringing. A typical gate voltage of **5 – 6 V** is recommended, with optional negative gate bias for hard-switching applications to improve dv/dt immunity and prevent false turn-on. Minimize gate loop inductance (<1 nH) through careful PCB layout and short connections. For additional robustness, Zener clamps may be used to limit gate voltage in both polarities.

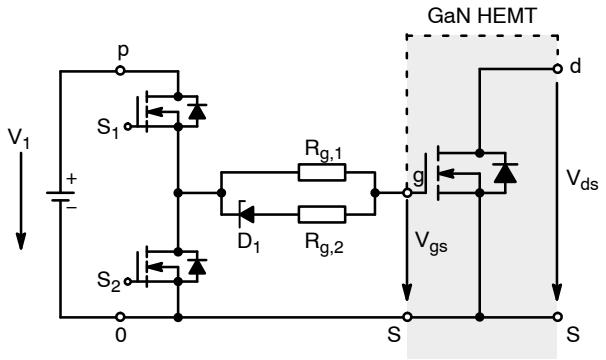

Figure 17. Schottky Gate Conventional Driver Schematic

ORDERING INFORMATION

Device Order Number	Package Type	Shipping†
NTLCC3D5N10GN1TWG	PTFP-N9 3.30x3.30 x 0.87, 0.65P (Pb-Free)	2500 / Tape & Reel

† For information on tape and reel specifications, including part orientation and tape sizes, please refer to our Tape and Reel Packaging Specifications Brochure, BRD8011/D.

Share Feedback
Your Opinion Matters

REVISION HISTORY

Revision	Description of Changes	Date
0	Initial document release.	6/15/2026

Share Feedback
Your Opinion Matters

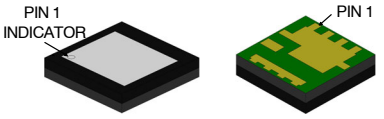

PTFP-N9 3.30x3.30x0.87, 0.65P
CASE 522AE
ISSUE O

DATE 13 MAR 2026

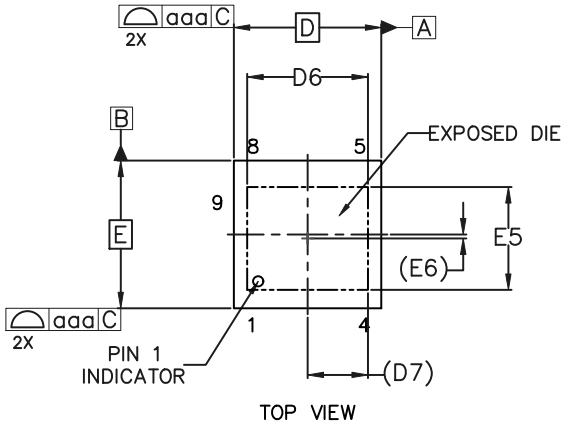

TOP VIEW

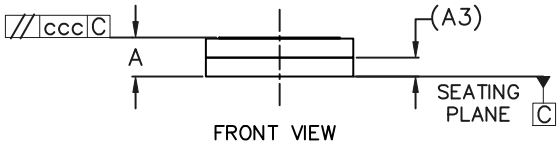

FRONT VIEW

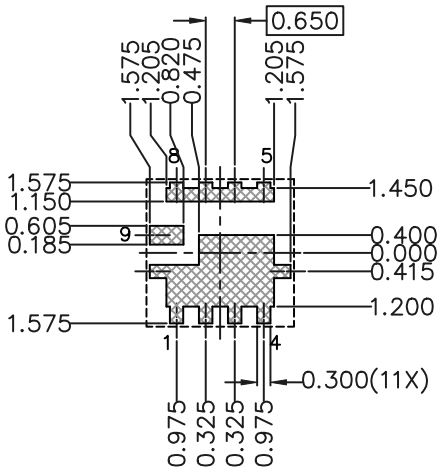

LAND PATTERN
RECOMENDATION

*FOR ADDITIONAL INFORMATION ON OUR PB−FREE STRATEGY AND SOLDERING DETAILS, PLEASE DOWNLOAD THE ONSEMI SOLDERING AND MOUNTING TECHNIQUES REFERENCE MANUAL, SOLDERRM/D.

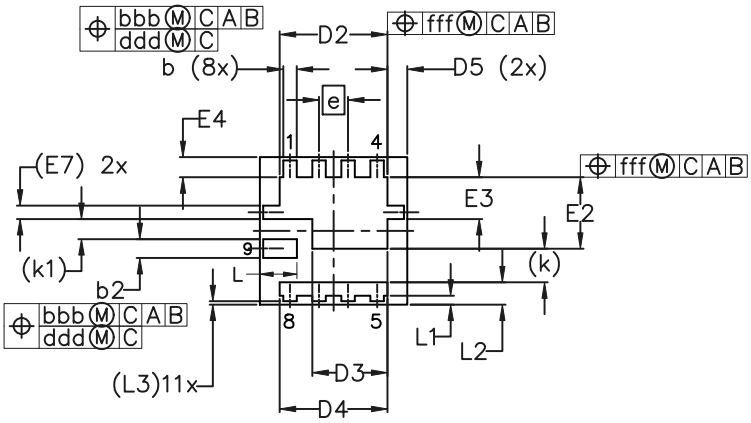

BOTTOM VIEW

UNIT IN MILLIMETER			
DIM	MIN	NOM	MAX
A	0.77	0.87	0.97
A3	0.42 REF		
b	0.25	0.30	0.35
b2	0.37	0.42	0.47
D	3.30 BSC		
D2	2.31	2.41	2.51
D3	1.58	1.68	1.78
D4	2.31	2.41	2.51
D5	0.35	0.45	0.55
D6	2.20	–	2.70
D7	1.35 REF		
E	3.30 BSC		
E2	1.50	1.60	1.70
E3	0.84	0.94	1.04
E4	0.35	0.45	0.55
E5	2.20	–	2.70
E6	0.09 REF		
E7	0.30 REF		
e	0.65 BSC		
k	0.75 REF		
k1	0.45 REF		
L	0.73	0.83	0.93
L1	0.10	0.20	0.30
L2	0.40	0.50	0.60
L3	0.075 REF		
aaa	0.10		
bbb	0.10		
ccc	0.10		
ddd	0.05		
fff	0.10		

GENERIC MARKING DIAGRAM*

XXXX = Specific Device Code
A = Assembly Location
Y = Year
WW = Work Week
ZZ = Assembly Lot Code

*This information is generic. Please refer to device data sheet for actual part marking. Pb−Free indicator, “G” or microdot “▪”, may or may not be present. Some products may not follow the Generic Marking.

DOCUMENT NUMBER:	98AON74627H	Electronic versions are uncontrolled except when accessed directly from the Document Repository. Printed versions are uncontrolled except when stamped “CONTROLLED COPY” in red.
DESCRIPTION:	PTFP-N9 3.30x3.30x0.87, 0.65P	PAGE 1 OF 1

onsemi and onsemi are trademarks of Semiconductor Components Industries, LLC dba **onsemi** or its subsidiaries in the United States and/or other countries. **onsemi** reserves the right to make changes without further notice to any products herein. **onsemi** makes no warranty, representation or guarantee regarding the suitability of its products for any particular purpose, nor does **onsemi** assume any liability arising out of the application or use of any product or circuit, and specifically disclaims any and all liability, including without limitation special, consequential or incidental damages. **onsemi** does not convey any license under its patent rights nor the rights of others.

onsemi, onsemi, and other names, marks, and brands are registered and/or common law trademarks of Semiconductor Components Industries, LLC dba "**onsemi**" or its affiliates and/or subsidiaries in the United States and/or other countries. **onsemi** owns the rights to a number of patents, trademarks, copyrights, trade secrets, and other intellectual property. A listing of **onsemi**'s product/patent coverage may be accessed at www.onsemi.com/site/pdf/Patent−Marking.pdf. **onsemi** reserves the right to make changes at any time to any products or information herein, without notice. The information herein is provided "as−is" and **onsemi** makes no warranty, representation or guarantee regarding the accuracy of the information, product features, availability, functionality, or suitability of its products for any particular purpose, nor does **onsemi** assume any liability arising out of the application or use of any product or circuit, and specifically disclaims any and all liability, including without limitation special, consequential or incidental damages. Buyer is responsible for its products and applications using **onsemi** products, including compliance with all laws, regulations and safety requirements or standards, regardless of any support or applications information provided by **onsemi**. "Typical" parameters which may be provided in **onsemi** data sheets and/or specifications can and do vary in different applications and actual performance may vary over time. All operating parameters, including "Typicals" must be validated for each customer application by customer's technical experts. **onsemi** does not convey any license under any of its intellectual property rights nor the rights of others. **onsemi** products are not designed, intended, or authorized for use as a critical component in life support systems or any FDA Class 3 medical devices or medical devices with a same or similar classification in a foreign jurisdiction or any devices intended for implantation in the human body. Should Buyer purchase or use **onsemi** products for any such unintended or unauthorized application, Buyer shall indemnify and hold **onsemi** and its officers, employees, subsidiaries, affiliates, and distributors harmless against all claims, costs, damages, and expenses, and reasonable attorney fees arising out of, directly or indirectly, any claim of personal injury or death associated with such unintended or unauthorized use, even if such claim alleges that **onsemi** was negligent regarding the design or manufacture of the part. **onsemi** is an Equal Opportunity/Affirmative Action Employer. This literature is subject to all applicable copyright laws and is not for resale in any manner.

ADDITIONAL INFORMATION

TECHNICAL PUBLICATIONS:
Technical Library: www.onsemi.com/design/resources/technical−documentation
onsemi Website: www.onsemi.com

ONLINE SUPPORT: www.onsemi.com/support
For additional information, please contact your local Sales Representative at
www.onsemi.com/support/sales